PG401 A02

4GB GDDR5, 256b, 128Mx32

Tall DVI-I + DP + DP + DP/HDMI + DP

TABLE OF CONTENTS

Page	Description
1	Table of Contents
2	Block Diagram
3	PCI Express
4	MEMORY: GPU Partition A/B
5	MEMORY: FBA[31:0]
6	MEMORY: FBA[63:32]
7	MEMORY: FBB[31:0]
8	MEMORY: FBB[63:32]
9	MEMORY: GPU Partition C/D
10	MEMORY: FBC[31:0]
11	MEMORY: FBC[63:32]
12	MEMORY: FBD[31:0]
13	MEMORY: FBD[63:32]
14	GPU PWR and GND
15	GPU Decoupling
16	DACA Interface
17	IFPAB DVI-I-DL
18	IFPEF with IFPE DP
19	IFPF DP
20	IFPC HDMI/DP
21	IFPD DP
22	MIOA/B Interface and Frame Lock
23	MISC1: Fan, Thermal, JTAG, GPIO, Stereo
24	MISC2: ROM, XTAL, Straps
25	PS: 5V, PEX_VDD
26	PS: FBVDD/Q
27	PS: NVVDD Controller
28	PS: NVVDD Phase 1,2
29	PS: NVVDD Phase 3,4
30	PS: NVVDD Phase 5, 6
31	PS: Dynamic Power Balance Logic
32	PS: Dynamic Power Balance Phases
33	PS: Inputs, Filtering, and Monitoring
34	PS: Shutdown
35	PS: 12V Current Steering PSI Control and LED
36	MECH: Bracket/Thermal
37	MICROCONTROLLER

MSI CONFIDENTIAL
00017967 jonepei(裴亮樂)
RD(C)20141102801 RMA工程課
吳積源 (00011601)

MICRO-STAR INT'L CO.,LTD
MS-V317

Size	Document Description	Rev
Custom	Table of contents	1.0

Date: Wednesday, August 20, 2014 Sheet 1 of 37

NVIDIA CORPORATION
2701 SAN TOMAS EXPRESSWAY
SANTA CLARA, CA 95050, USA

ASSEMBLY	BASE LEVEL GENERIC SCHEMATIC ONLY
PAGE DETAIL	Table of Contents

NV_PN	600-1G401-BASE-QS1		
PCB REV	PG401-A02	PAGE	1 OF 37
BOM REV	A	DATE	04-AUG-2014

ALL NVIDIA DESIGN SPECIFICATIONS, REFERENCE SPECIFICATIONS, REFERENCE BOARDS, FILES, DRAWINGS, DIAGNOSTICS, LISTS AND OTHER DOCUMENTS OR INFORMATION (TOGETHER AND SEPARATELY, 'MATERIALS') ARE BEING PROVIDED 'AS IS'. THE MATERIALS MAY CONTAIN KNOWN AND UNKNOWN VIOLATIONS OR DEVIATIONS OF INDUSTRY STANDARDS AND SPECIFICATIONS. NVIDIA MAKES NO WARRANTIES, EXPRESSED, IMPLIED, STATUTORY OR OTHERWISE WITH RESPECT TO THE MATERIALS OR OTHERWISE, AND EXPRESSLY DISCLAIMS ALL IMPLIED WARRANTIES INCLUDING, WITHOUT LIMITATION, THE WARRANTIES OF DESIGN, OF NONINFRINGEMENT, MERCHANTABILITY OR FITNESS FOR A PARTICULAR PURPOSE, OR ARISING FROM A COURSE OF DEALING, TRADE USAGE, TRADE PRACTICE, OR INDUSTRY STANDARDS.

Page2: Block Diagram

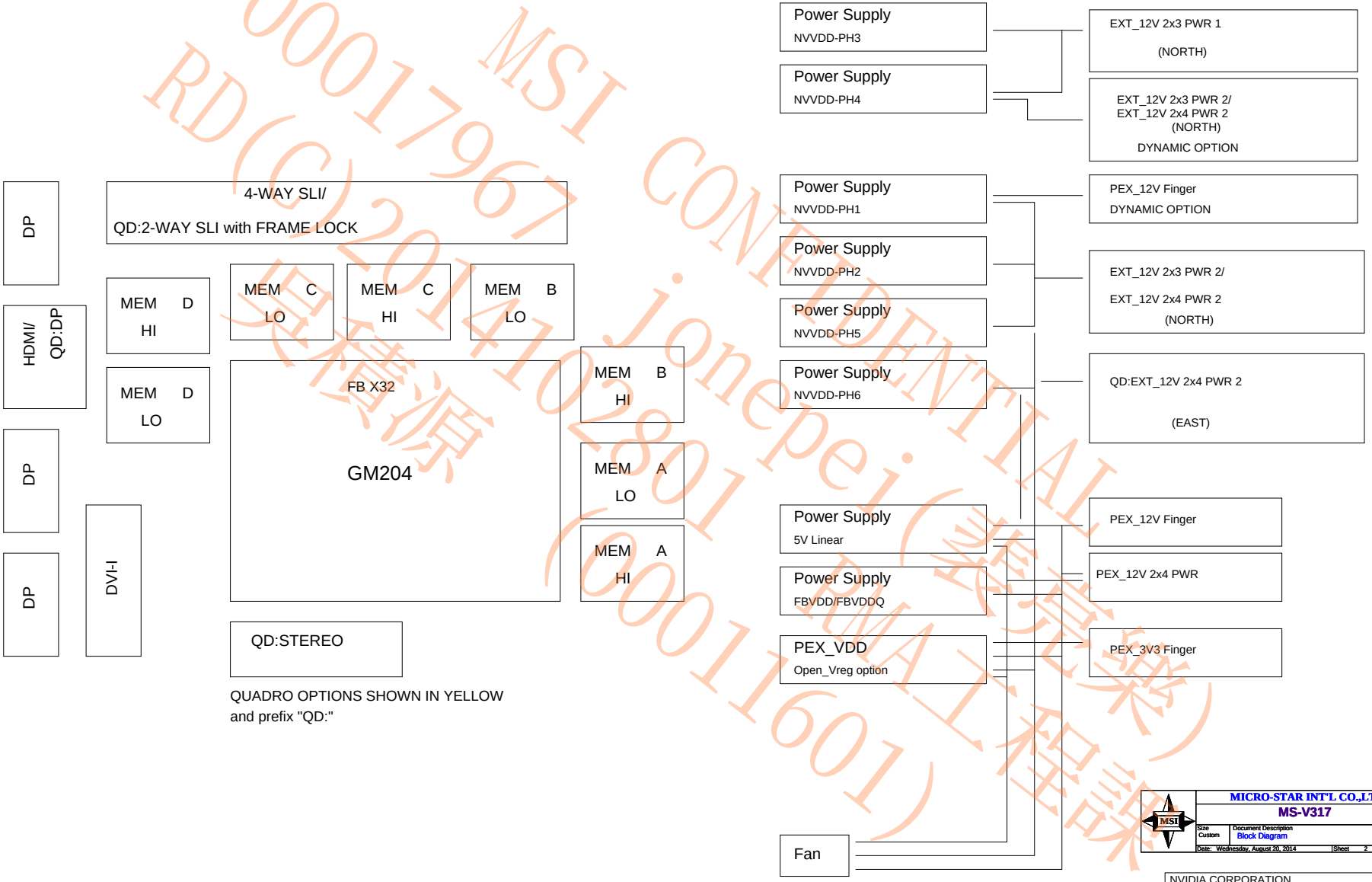

MSI CONFIDENTIAL
00017967
RD(C)2014102801 jonepei(裴清樂)
吳積源 (00011601) RMA工程課

MICRO-STAR INT'L CO.,LTD
MS-V317

Size	Document Description	Rev
Custom	Block Diagram	1.0

Date: Wednesday, August 20, 2014 Sheet 2 of 37

ASSEMBLY	BASE LEVEL GENERIC SCHEMATIC ONLY
PAGE DETAIL	Block Diagram

ALL NVIDIA DESIGN SPECIFICATIONS, REFERENCE SPECIFICATIONS, REFERENCE BOARDS, FILES, DRAWINGS, DIAGNOSTICS, LISTS AND OTHER DOCUMENTS OR INFORMATION (TOGETHER AND SEPARATELY, 'MATERIALS') ARE BEING PROVIDED 'AS IS'. THE MATERIALS MAY CONTAIN KNOWN AND UNKNOWN VIOLATIONS OR DEVIATIONS OF INDUSTRY STANDARDS AND SPECIFICATIONS. NVIDIA MAKES NO WARRANTIES, EXPRESSED, IMPLIED, STATUTORY OR OTHERWISE WITH RESPECT TO THE MATERIALS OR OTHERWISE, AND EXPRESSLY DISCLAIMS ALL IMPLIED WARRANTIES INCLUDING, WITHOUT LIMITATION, THE WARRANTIES OF DESIGN, OF NONINFRINGEMENT, MERCHANTABILITY OR FITNESS FOR A PARTICULAR PURPOSE, OR ARISING FROM A COURSE OF DEALING, TRADE USAGE, TRADE PRACTICE, OR INDUSTRY STANDARDS.

NVIDIA CORPORATION
2701 SAN TOMAS EXPRESSWAY
SANTA CLARA, CA 95050, USA

NV_PN	600-1G401-BASE-QS1		
PCB REV	PG401-A02	PAGE	2 OF 37
BOM REV	A	DATE	04-AUG-2014

Page3: PCI Express

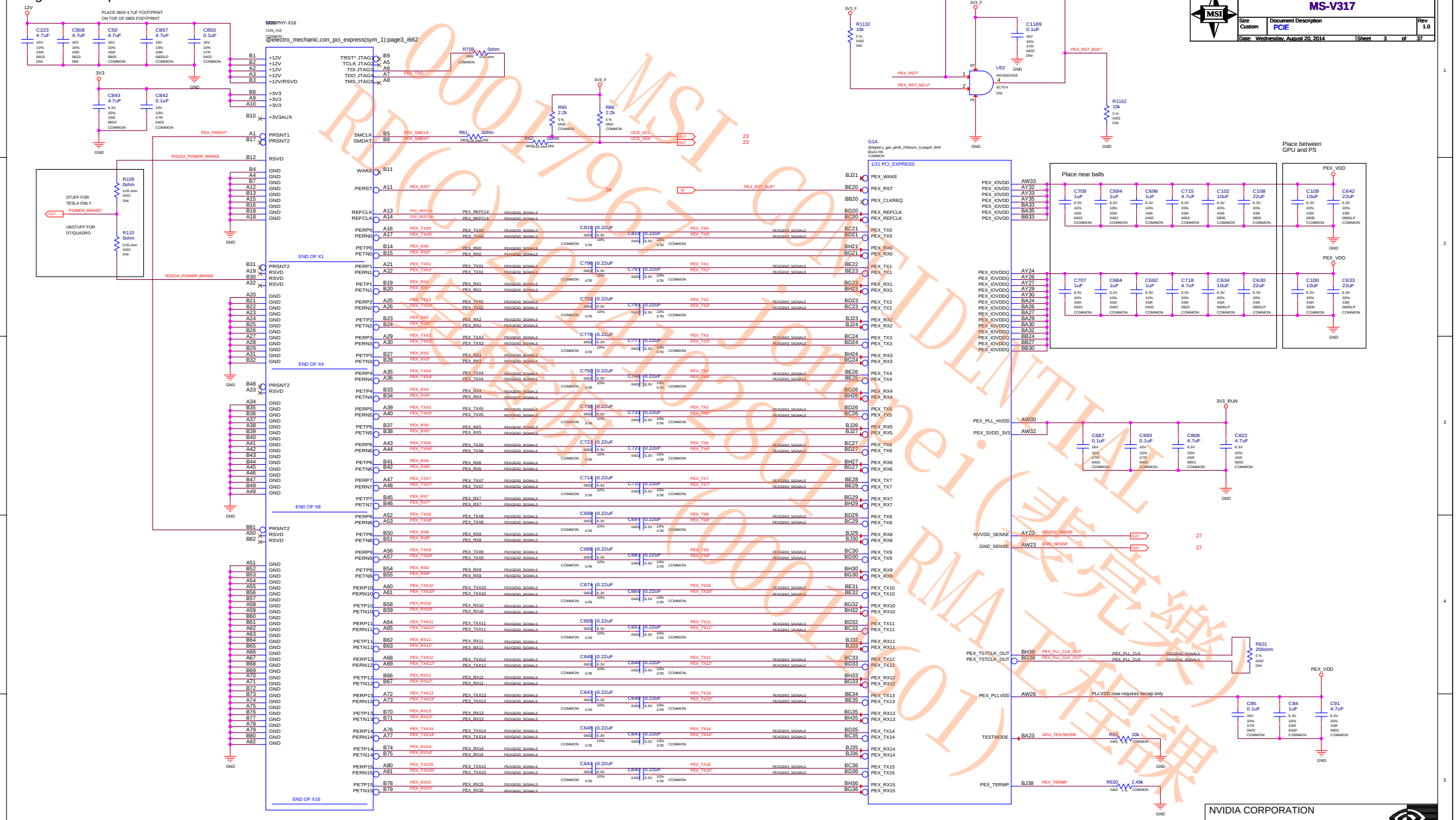

Page4: MEMORY: GPU Partition A/B

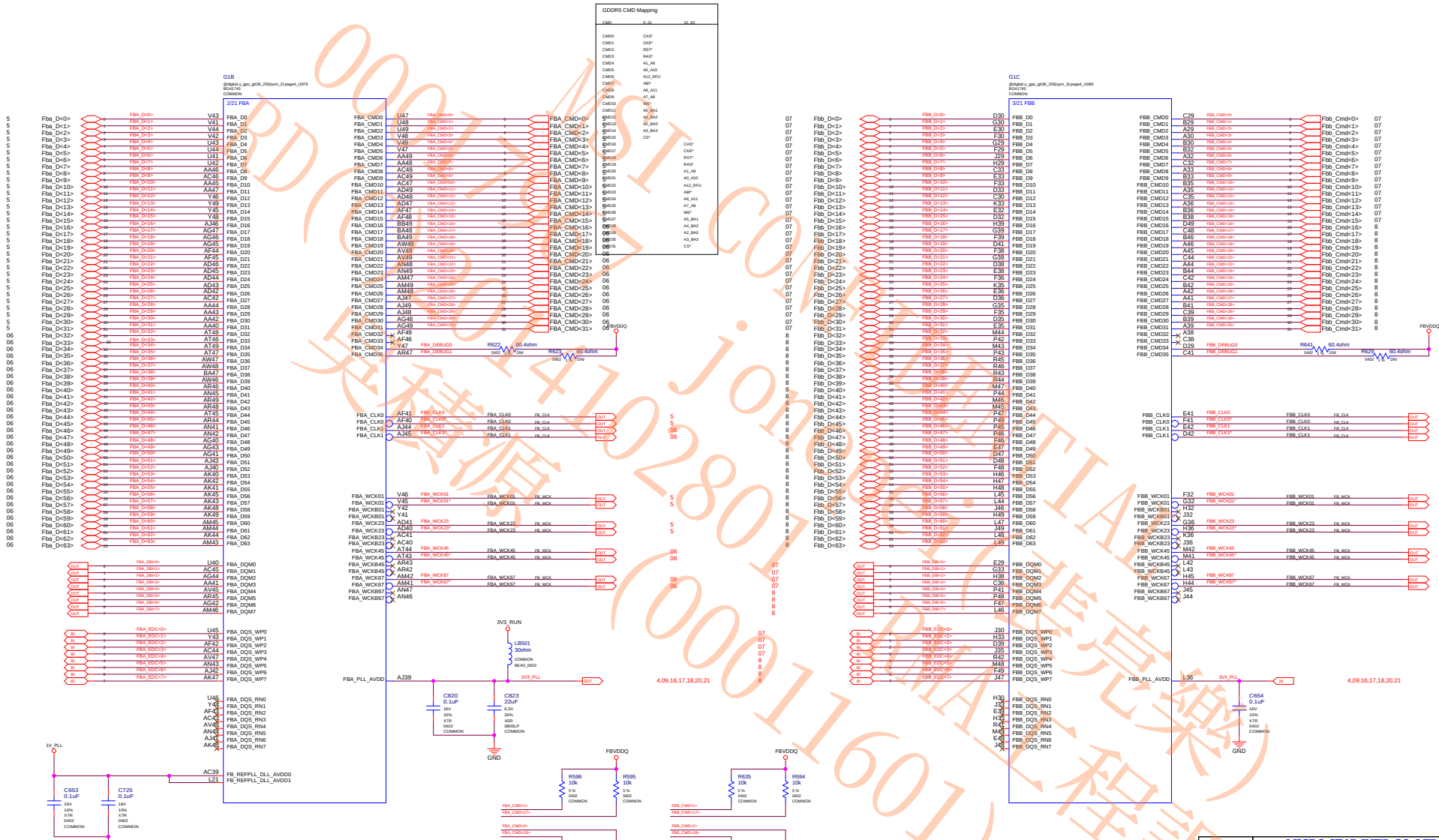

MICRO-STAR INT'L CO.,LTD	
MS-V317	
Size: Custom	Document Description: MEMORY: GPU Partition A/B — Rev 1.0
Date: Wednesday, August 20, 2014	Sheet 4 of 37

NVIDIA CORPORATION
2701 SAN TOMAS EXPRESSWAY
SANTA CLARA, CA 95050, USA

NV_PN	600-1G401-BASE-QS1		
PCB REV	PG401-A02	PAGE	4 OF 37
BOM REV	A	DATE	04-AUG-2014

ASSEMBLY	BASE LEVEL GENERIC SCHEMATIC ONLY
PAGE DETAIL	MEMORY: GPU Partition A/B

ALL NVIDIA DESIGN SPECIFICATIONS, REFERENCE SPECIFICATIONS, REFERENCE BOARDS, FILES, DRAWINGS, DIAGNOSTICS, LISTS AND OTHER DOCUMENTS OR INFORMATION (TOGETHER AND SEPARATELY, "MATERIALS") ARE BEING PROVIDED "AS IS". THE MATERIALS MAY CONTAIN KNOWN AND UNKNOWN VIOLATIONS OR DEVIATIONS OF INDUSTRY STANDARDS AND SPECIFICATIONS. NVIDIA MAKES NO WARRANTIES, EXPRESSED, IMPLIED, STATUTORY OR OTHERWISE WITH RESPECT TO THE MATERIALS OR OTHERWISE, AND EXPRESSLY DISCLAIMS ALL IMPLIED WARRANTIES INCLUDING, WITHOUT LIMITATION, THE WARRANTIES OF DESIGN, OF NONINFRINGEMENT, MERCHANTABILITY OR FITNESS FOR A PARTICULAR PURPOSE, OR ARISING FROM A COURSE OF DEALING, TRADE USAGE, TRADE PRACTICE, OR INDUSTRY STANDARDS.

Page5: MEMORY: FBA Partition 31..0

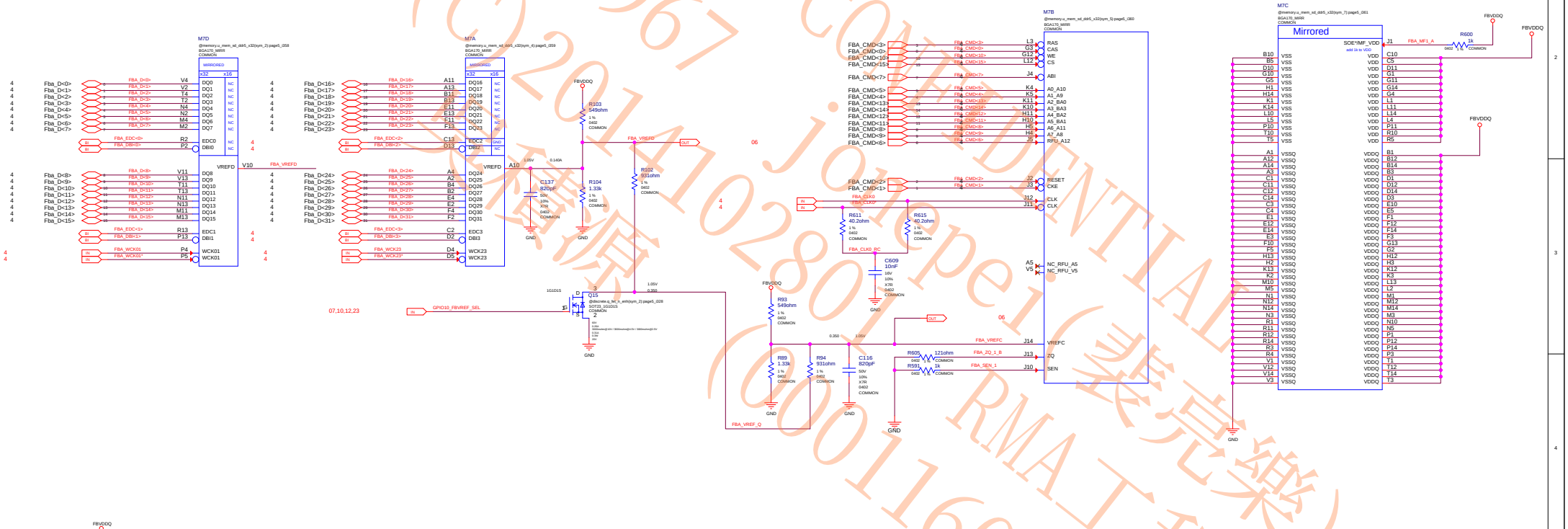

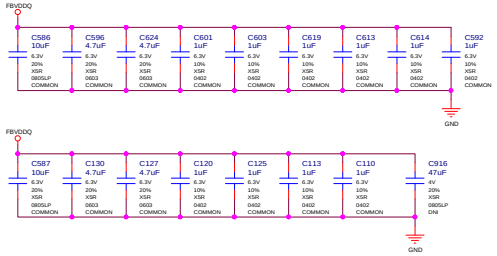

ASSEMBLY	BASE LEVEL GENERIC SCHEMATIC ONLY
PAGE DETAIL	MEMORY: FBA[31:0]

ALL NVIDIA DESIGN SPECIFICATIONS, REFERENCE SPECIFICATIONS, REFERENCE BOARDS, FILES, DRAWINGS, DIAGNOSTICS, LISTS AND OTHER DOCUMENTS OR INFORMATION (TOGETHER AND SEPARATELY, 'MATERIALS') ARE BEING PROVIDED 'AS IS'. THE MATERIALS MAY CONTAIN KNOWN AND UNKNOWN VIOLATIONS OR DEVIATIONS OF INDUSTRY STANDARDS AND SPECIFICATIONS. NVIDIA MAKES NO WARRANTIES, EXPRESSED, IMPLIED, STATUTORY OR OTHERWISE WITH RESPECT TO THE MATERIALS OR OTHERWISE, AND EXPRESSLY DISCLAIMS ALL IMPLIED WARRANTIES INCLUDING, WITHOUT LIMITATION, THE WARRANTIES OF DESIGN, OF NONINFRINGEMENT, MERCHANTABILITY OR FITNESS FOR A PARTICULAR PURPOSE, OR ARISING FROM A COURSE OF DEALING, TRADE USAGE, TRADE PRACTICE, OR INDUSTRY STANDARDS.

MICRO-STAR INT'L CO.,LTD

MS-V317

Size	Document Description	Rev
Custom	5: MEMORY: FBA Partition 31..0	10

Date: Wednesday, August 20, 2014 | Sheet 5 of 37

NVIDIA CORPORATION
2701 SAN TOMAS EXPRESSWAY
SANTA CLARA, CA 95050, USA

NV_PN	600-1G401-BASE-QS1		
PCB REV	PG401-A02	PAGE	5 OF 37
BOM REV	A	DATE	04-AUG-2014

MSI COMPANY CONFIDENTIAL
0001796 7
RD(C)2014102807 jianpei(裴亮樂)
(客戶端源) RMA工程課
(00011601)

Page6: MEMORY: FBA Partition 63..32

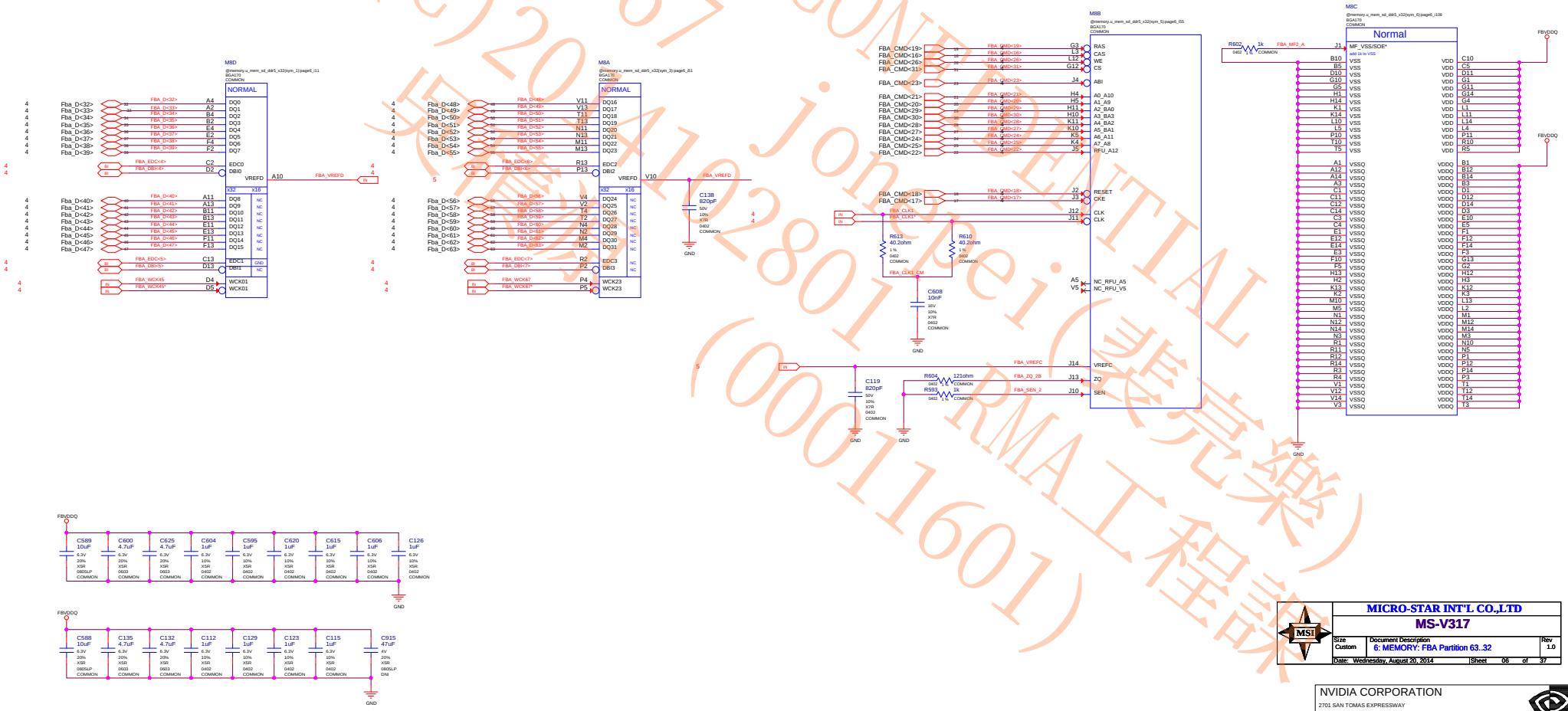

ASSEMBLY	BASE LEVEL GENERIC SCHEMATIC ONLY
PAGE DETAIL	MEMORY: FBA[63:32]

MICRO-STAR INT'L CO.,LTD

MS-V317

Size	Document Description	Rev
Custom	6: MEMORY: FBA Partition 63..32	1.0

Date: Wednesday, August 20, 2014 Sheet 06 of 37

NVIDIA CORPORATION
2701 SAN TOMAS EXPRESSWAY
SANTA CLARA, CA 95050, USA

NV_PN	600-1G401-BASE-QS1		
PCB REV	PG401-A02	PAGE	6 OF 37
BOM REV	A	DATE	04-AUG-2014

ALL NVIDIA DESIGN SPECIFICATIONS, REFERENCE SPECIFICATIONS, REFERENCE BOARDS, FILES, DRAWINGS, DIAGNOSTICS, LISTS AND OTHER DOCUMENTS OR INFORMATION (TOGETHER AND SEPARATELY, 'MATERIALS') ARE BEING PROVIDED 'AS IS'. THE MATERIALS MAY CONTAIN KNOWN AND UNKNOWN VIOLATIONS OR DEVIATIONS OF INDUSTRY STANDARDS AND SPECIFICATIONS. NVIDIA MAKES NO WARRANTIES, EXPRESSED, IMPLIED, STATUTORY OR OTHERWISE WITH RESPECT TO THE MATERIALS OR OTHERWISE, AND EXPRESSLY DISCLAIMS ALL IMPLIED WARRANTIES INCLUDING, WITHOUT LIMITATION, THE WARRANTIES OF DESIGN, OF NONINFRINGEMENT, MERCHANTABILITY OR FITNESS FOR A PARTICULAR PURPOSE, OR ARISING FROM A COURSE OF DEALING, TRADE USAGE, TRADE PRACTICE, OR INDUSTRY STANDARDS.

MSI CONFIDENTIAL
0001796 7
RD(C)2014102801 jonathan.lei(雷亮樂)
(0001160 1) RMA工程部

Page7: MEMORY: FBB Partition 31..0

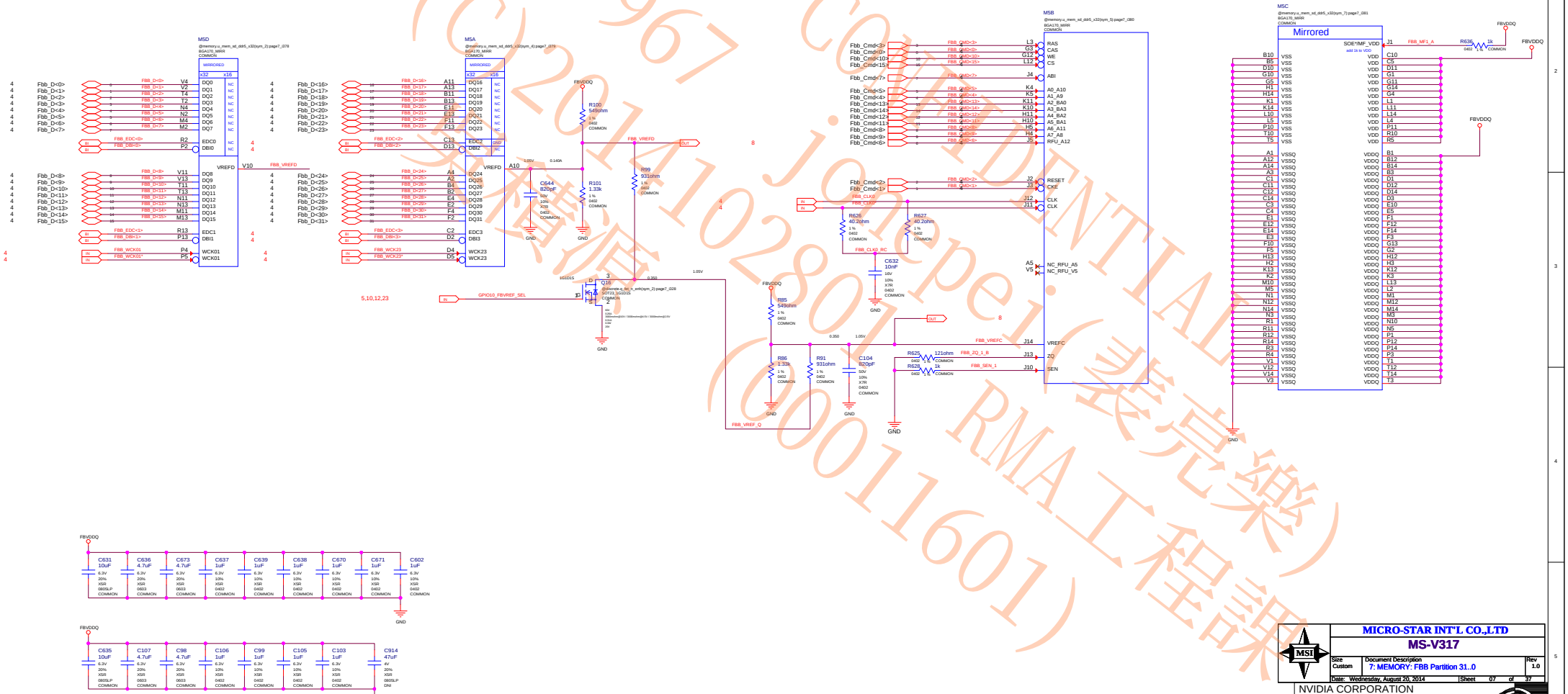

ASSEMBLY	BASE LEVEL GENERIC SCHEMATIC ONLY
PAGE DETAIL	MEMORY: FBB[31:0]

ALL NVIDIA DESIGN SPECIFICATIONS, REFERENCE SPECIFICATIONS, REFERENCE BOARDS, FILES, DRAWINGS, DIAGNOSTICS, LISTS AND OTHER DOCUMENTS OR INFORMATION (TOGETHER AND SEPARATELY, "MATERIALS") ARE BEING PROVIDED "AS IS". THE MATERIALS MAY CONTAIN KNOWN AND UNKNOWN VIOLATIONS OR DEVIATIONS OF INDUSTRY STANDARDS AND SPECIFICATIONS. NVIDIA MAKES NO WARRANTIES, EXPRESSED, IMPLIED, STATUTORY OR OTHERWISE WITH RESPECT TO THE MATERIALS OR OTHERWISE, AND EXPRESSLY DISCLAIMS ALL IMPLIED WARRANTIES INCLUDING, WITHOUT LIMITATION, THE WARRANTIES OF DESIGN, OF NONINFRINGEMENT, MERCHANTABILITY OR FITNESS FOR A PARTICULAR PURPOSE, OR ARISING FROM A COURSE OF DEALING, TRADE USAGE, TRADE PRACTICE, OR INDUSTRY STANDARDS.

MICRO-STAR INT'L CO.,LTD

MS-V317

Size	Document Description	Rev
Custom	7: MEMORY: FBB Partition 31..0	1.0

Date: Wednesday, August 20, 2014 | Sheet 07 of 37

NVIDIA CORPORATION
2701 SAN TOMAS EXPRESSWAY
SANTA CLARA, CA 95050, USA

NV_PN	600-1G401-BASE-QS1		
PCB REV	PG401-A02	PAGE	7 OF 37
BOM REV	A	DATE	04-AUG-2014

MSI COMPUTER CORP. CONFIDENTIAL
RD(C)2014102801 jonpei(裴亮樂)
(00011601) RMA工程課
00017967

Page8: MEMORY: FBB Partition 63..32

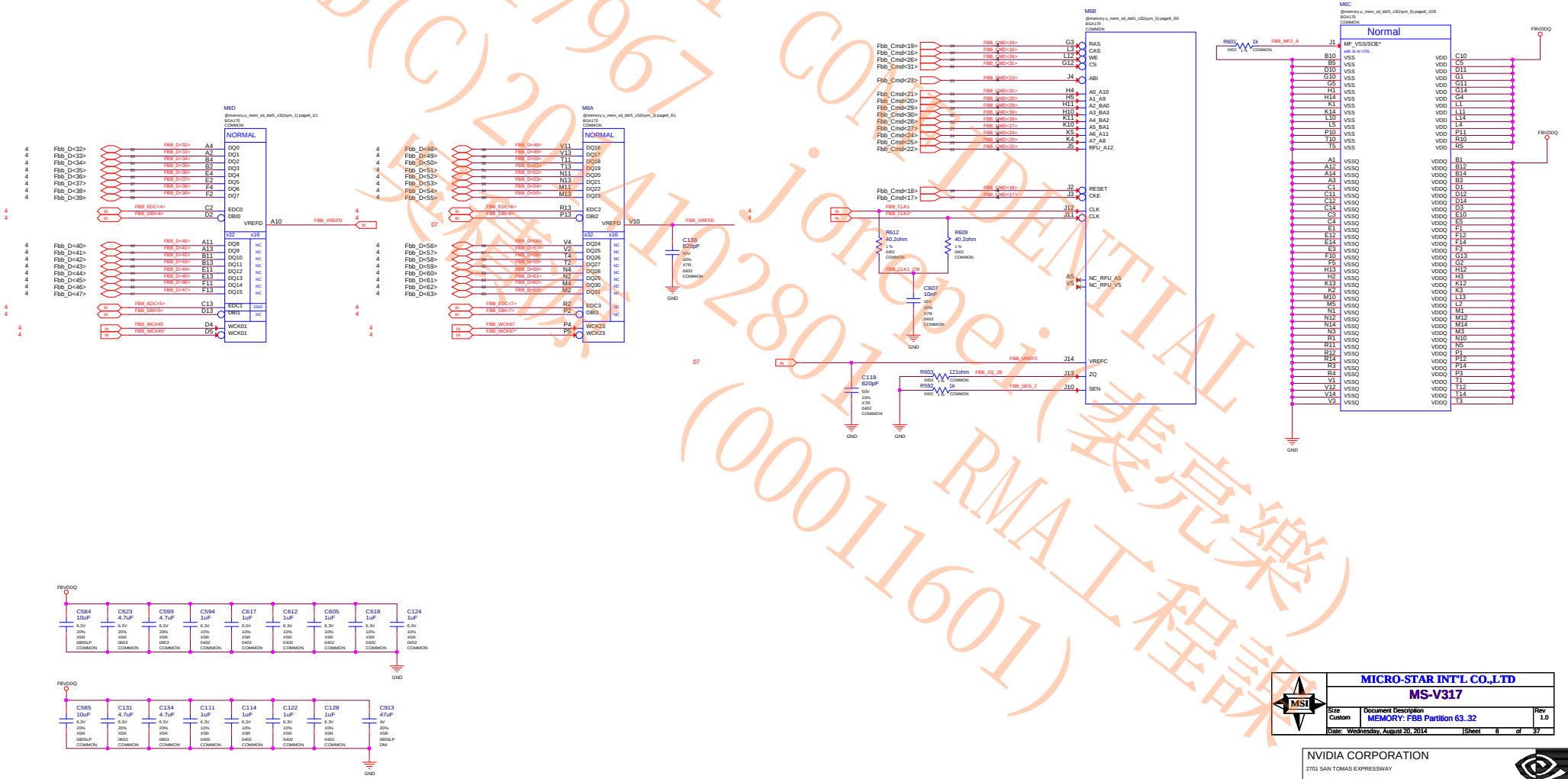

MSI COMPANY CONFIDENTIAL
0001796 7 jimmyei(裴亮樂)
RD(C)2014102801 RMA工程師
(0001160 1)

ASSEMBLY	BASE LEVEL GENERIC SCHEMATIC ONLY
PAGE DETAIL	MEMORY: FBB[63:32]

ALL NVIDIA DESIGN SPECIFICATIONS, REFERENCE SPECIFICATIONS, REFERENCE BOARDS, FILES, DRAWINGS, DIAGNOSTICS, LISTS AND OTHER DOCUMENTS OR INFORMATION (TOGETHER AND SEPARATELY, 'MATERIALS') ARE BEING PROVIDED 'AS IS'. THE MATERIALS MAY CONTAIN KNOWN AND UNKNOWN VIOLATIONS OR DEVIATIONS OF INDUSTRY STANDARDS AND SPECIFICATIONS. NVIDIA MAKES NO WARRANTIES, EXPRESSED, IMPLIED, STATUTORY OR OTHERWISE WITH RESPECT TO THE MATERIALS OR OTHERWISE, AND EXPRESSLY DISCLAIMS ALL IMPLIED WARRANTIES INCLUDING, WITHOUT LIMITATION, THE WARRANTIES OF DESIGN, OF NONINFRINGEMENT, MERCHANTABILITY OR FITNESS FOR A PARTICULAR PURPOSE, OR ARISING FROM A COURSE OF DEALING, TRADE USAGE, TRADE PRACTICE, OR INDUSTRY STANDARDS.

MICRO-STAR INT'L CO.,LTD

MS-V317

Size	Document Description	Rev
Custom	MEMORY: FBB Partition 63..32	1.0

Date: Wednesday, August 20, 2014 | Sheet 8 of 37

NVIDIA CORPORATION
2701 SAN TOMAS EXPRESSWAY
SANTA CLARA, CA 95050, USA

NV_PN	600-1G401-BASE-QS1		
PCB REV	PG401-A02	PAGE	8 OF 37
BOM REV	A	DATE	04-AUG-2014

Page9: MEMORY: GPU Partition C/D

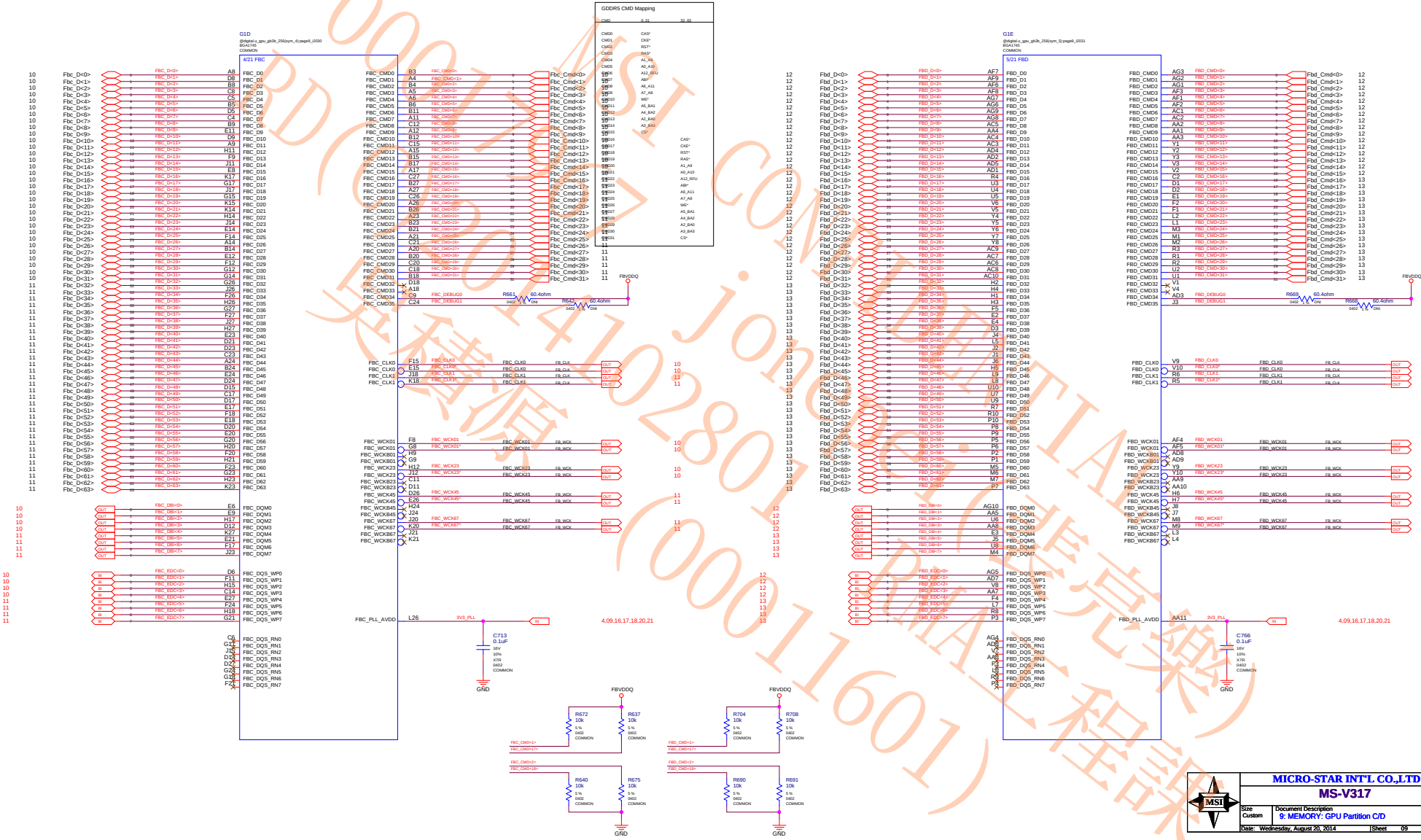

MICRO-STAR INT'L CO.,LTD	
MS-V317	
Size: Custom	Document Description: 9: MEMORY: GPU Partition C/D
Rev: 1.0	
Date: Wednesday, August 20, 2014	Sheet 09 of 37

NVIDIA CORPORATION
2701 SAN TOMAS EXPRESSWAY
SANTA CLARA, CA 95050, USA

NV_PN	600-1G401-BASE-QS1		
PCB REV	PG401-A02	PAGE	9 OF 37
BOM REV	A	DATE	04-AUG-2014

ASSEMBLY	BASE LEVEL GENERIC SCHEMATIC ONLY
PAGE DETAIL	MEMORY: GPU Partition C/D

ALL NVIDIA DESIGN SPECIFICATIONS, REFERENCE SPECIFICATIONS, REFERENCE BOARDS, FILES, DRAWINGS, DIAGNOSTICS, LISTS AND OTHER DOCUMENTS OR INFORMATION (TOGETHER AND SEPARATELY, "MATERIALS") ARE BEING PROVIDED "AS IS". THE MATERIALS MAY CONTAIN KNOWN AND UNKNOWN VIOLATIONS OR DEVIATIONS OF INDUSTRY STANDARDS AND SPECIFICATIONS. NVIDIA MAKES NO WARRANTIES, EXPRESSED, IMPLIED, STATUTORY OR OTHERWISE, WITH RESPECT TO THE MATERIALS OR OTHERWISE, AND EXPRESSLY DISCLAIMS ALL IMPLIED WARRANTIES INCLUDING, WITHOUT LIMITATION, THE WARRANTIES OF DESIGN, OF NONINFRINGEMENT, MERCHANTABILITY OR FITNESS FOR A PARTICULAR PURPOSE, OR ARISING FROM A COURSE OF DEALING, TRADE USAGE, TRADE PRACTICE, OR INDUSTRY STANDARDS.

Page10: MEMORY: FBC Partition 31..0

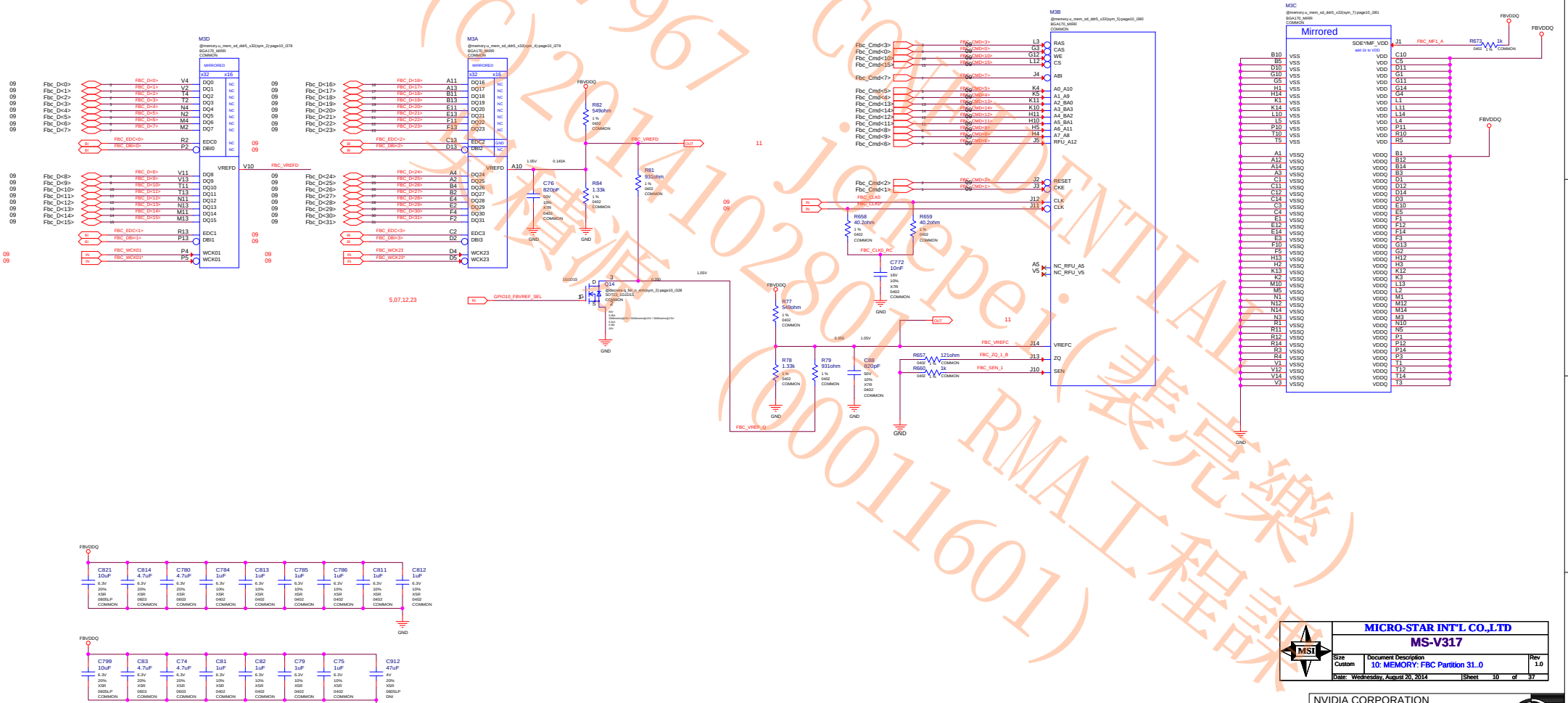

ASSEMBLY	BASE LEVEL GENERIC SCHEMATIC ONLY
PAGE DETAIL	MEMORY: FBC[31:0]

ALL NVIDIA DESIGN SPECIFICATIONS, REFERENCE SPECIFICATIONS, REFERENCE BOARDS, FILES, DRAWINGS, DIAGNOSTICS, LISTS AND OTHER DOCUMENTS OR INFORMATION (TOGETHER AND SEPARATELY, 'MATERIALS') ARE BEING PROVIDED 'AS IS'. THE MATERIALS MAY CONTAIN KNOWN AND UNKNOWN VIOLATIONS OR DEVIATIONS OF INDUSTRY STANDARDS AND SPECIFICATIONS. NVIDIA MAKES NO WARRANTIES, EXPRESSED, IMPLIED, STATUTORY OR OTHERWISE WITH RESPECT TO THE MATERIALS OR OTHERWISE, AND EXPRESSLY DISCLAIMS ALL IMPLIED WARRANTIES INCLUDING, WITHOUT LIMITATION, THE WARRANTIES OF DESIGN, OF NONINFRINGEMENT, MERCHANTABILITY OR FITNESS FOR A PARTICULAR PURPOSE, OR ARISING FROM A COURSE OF DEALING, TRADE USAGE, TRADE PRACTICE, OR INDUSTRY STANDARDS.

MICRO-STAR INT'L CO.,LTD

MS-V317

Size	Document Description	Rev
Custom	10: MEMORY: FBC Partition 31..0	1.0

Date: Wednesday, August 20, 2014 | Sheet 10 of 37

NVIDIA CORPORATION
2701 SAN TOMAS EXPRESSWAY
SANTA CLARA, CA 95050, USA

NV_PN	600-1G401-BASE-QS1		
PCB REV	PG401-A02	PAGE	10 OF 37
BOM REV	A	DATE	04-AUG-2014

MSI CONFIDENTIAL
RD(C)20141028017 jonepei(裴亮樂)
RMA工程師 (00011601)
00017967

Page11: MEMORY: FBC Partition 63..32

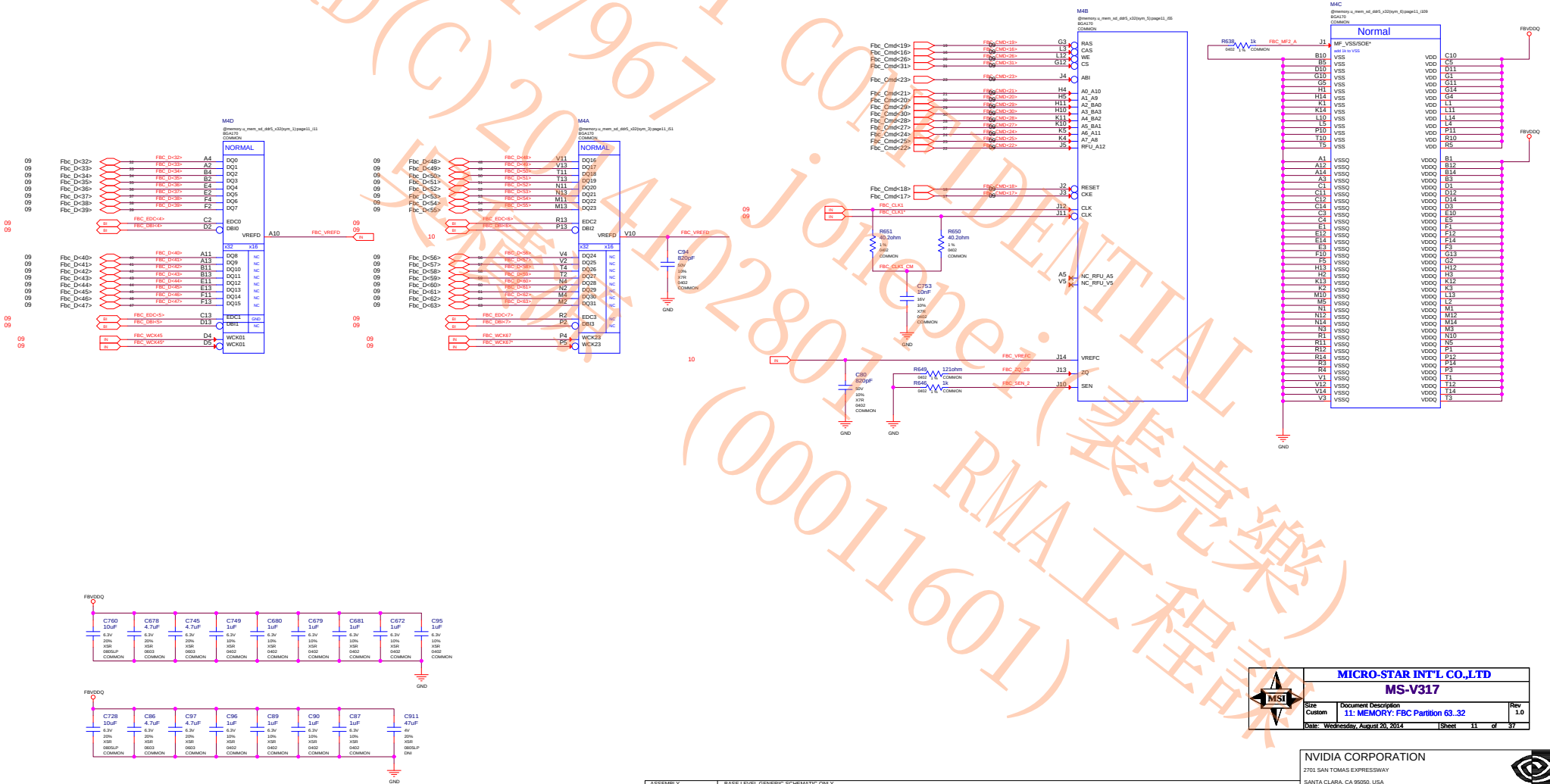

MSI COMPUTER CORP.
00017967
RD(C)2014028011
CONFIDENTIAL
jonepe.(裝亮樂)
RMA工程部
(00011601)

ASSEMBLY	BASE LEVEL GENERIC SCHEMATIC ONLY
PAGE DETAIL	MEMORY: FBC[63:32]

ALL NVIDIA DESIGN SPECIFICATIONS, REFERENCE SPECIFICATIONS, REFERENCE BOARDS, FILES, DRAWINGS, DIAGNOSTICS, LISTS AND OTHER DOCUMENTS OR INFORMATION (TOGETHER AND SEPARATELY, 'MATERIALS') ARE BEING PROVIDED 'AS IS'. THE MATERIALS MAY CONTAIN KNOWN AND UNKNOWN VIOLATIONS OR DEVIATIONS OF INDUSTRY STANDARDS AND SPECIFICATIONS. NVIDIA MAKES NO WARRANTIES, EXPRESSED, IMPLIED, STATUTORY OR OTHERWISE WITH RESPECT TO THE MATERIALS OR OTHERWISE, AND EXPRESSLY DISCLAIMS ALL IMPLIED WARRANTIES INCLUDING, WITHOUT LIMITATION, THE WARRANTIES OF DESIGN, OF NONINFRINGEMENT, MERCHANTABILITY OR FITNESS FOR A PARTICULAR PURPOSE, OR ARISING FROM A COURSE OF DEALING, TRADE USAGE, TRADE PRACTICE, OR INDUSTRY STANDARDS.

MICRO-STAR INT'L CO.,LTD

MS-V317

Size	Document Description	Rev
Custom	11: MEMORY: FBC Partition 63..32	1.0

Date: Wednesday, August 20, 2014 | Sheet 11 of 37

NVIDIA CORPORATION
2701 SAN TOMAS EXPRESSWAY
SANTA CLARA, CA 95050, USA

NV_PN	600-1G401-BASE-QS1		
PCB REV	PG401-A02	PAGE	11 OF 37
BOM REV	A	DATE	04-AUG-2014

Page12: MEMORY: FBD Partition 31..0

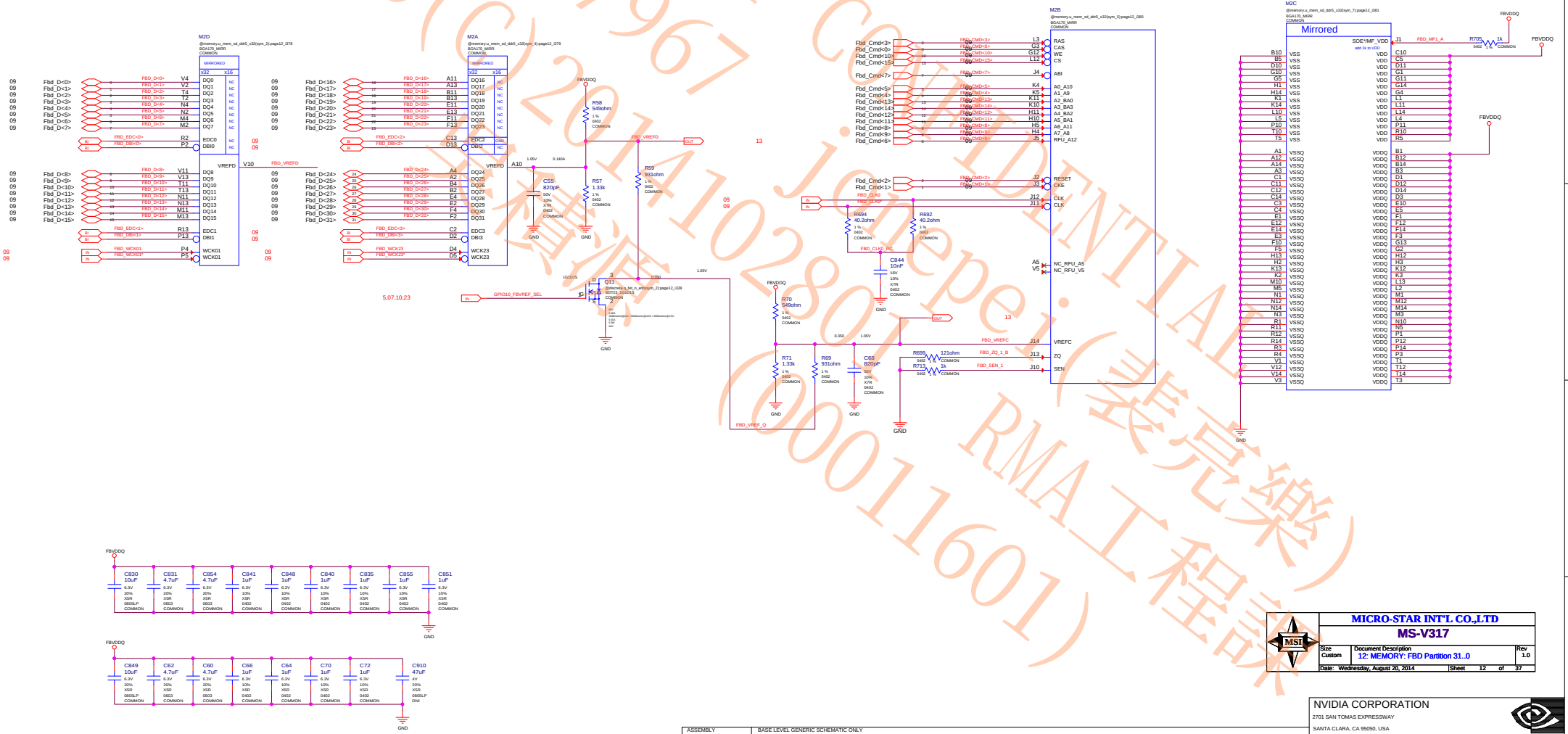

ASSEMBLY	BASE LEVEL GENERIC SCHEMATIC ONLY
PAGE DETAIL	MEMORY: FBD[31:0]

ALL NVIDIA DESIGN SPECIFICATIONS, REFERENCE SPECIFICATIONS, REFERENCE BOARDS, FILES, DRAWINGS, DIAGNOSTICS, LISTS AND OTHER DOCUMENTS OR INFORMATION (TOGETHER AND SEPARATELY, "MATERIALS") ARE BEING PROVIDED "AS IS". THE MATERIALS MAY CONTAIN KNOWN AND UNKNOWN VIOLATIONS OR DEVIATIONS OF INDUSTRY STANDARDS AND SPECIFICATIONS. NVIDIA MAKES NO WARRANTIES, EXPRESSED, IMPLIED, STATUTORY OR OTHERWISE WITH RESPECT TO THE MATERIALS OR OTHERWISE, AND EXPRESSLY DISCLAIMS ALL IMPLIED WARRANTIES INCLUDING, WITHOUT LIMITATION, THE WARRANTIES OF DESIGN, OF NONINFRINGEMENT, MERCHANTABILITY OR FITNESS FOR A PARTICULAR PURPOSE, OR ARISING FROM A COURSE OF DEALING, TRADE USAGE, TRADE PRACTICE, OR INDUSTRY STANDARDS.

MICRO-STAR INT'L CO.,LTD

MS-V317

Size	Document Description	Rev
Custom	12: MEMORY: FBD Partition 31..0	1.0

Date: Wednesday, August 20, 2014 | Sheet 12 of 37

NVIDIA CORPORATION
2701 SAN TOMAS EXPRESSWAY
SANTA CLARA, CA 95050, USA

NV_PN	600-1G401-BASE-QS1		
PCB REV	PG401-A02	PAGE	12 OF 37
BOM REV	A	DATE	04-AUG-2014

MSI CONFIDENTIAL
00017967
RD(C)2014102801
jimpei(裴亮樂)
RMA工程師
(00011601)

Page13: MEMORY: FBD Partition 63..32

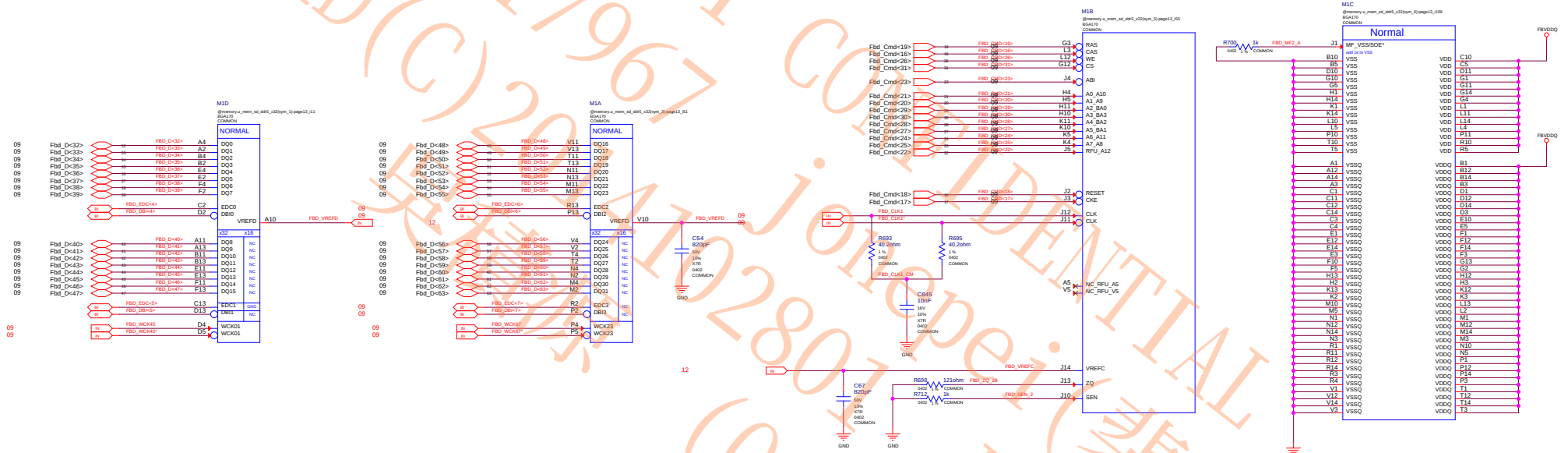

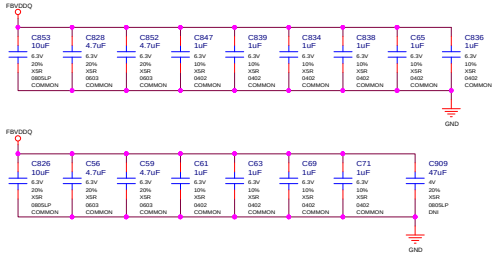

MSI CONFIDENTIAL
0001796 7 jorepe (裴亮樂)
RD(C)2014D2801
RMA工程師
(00011601)

ASSEMBLY	BASE LEVEL GENERIC SCHEMATIC ONLY
PAGE DETAIL	MEMORY: FBD[63:32]

ALL NVIDIA DESIGN SPECIFICATIONS, REFERENCE SPECIFICATIONS, REFERENCE BOARDS, FILES, DRAWINGS, DIAGNOSTICS, LISTS AND OTHER DOCUMENTS OR INFORMATION (TOGETHER AND SEPARATELY, 'MATERIALS') ARE BEING PROVIDED 'AS IS'. THE MATERIALS MAY CONTAIN KNOWN AND UNKNOWN VIOLATIONS OR DEVIATIONS OF INDUSTRY STANDARDS AND SPECIFICATIONS. NVIDIA MAKES NO WARRANTIES, EXPRESSED, IMPLIED, STATUTORY OR OTHERWISE WITH RESPECT TO THE MATERIALS OR OTHERWISE, AND EXPRESSLY DISCLAIMS ALL IMPLIED WARRANTIES INCLUDING, WITHOUT LIMITATION, THE WARRANTIES OF DESIGN, OF NONINFRINGEMENT, MERCHANTABILITY OR FITNESS FOR A PARTICULAR PURPOSE, OR ARISING FROM A COURSE OF DEALING, TRADE USAGE, TRADE PRACTICE, OR INDUSTRY STANDARDS.

MICRO-STAR INT'L CO.,LTD

MS-V317

Size	Document Description	Rev
Custom	13: MEMORY: FBD Partition 63..32	1.0

Date: Wednesday, August 20, 2014 | Sheet 13 of 37

NVIDIA CORPORATION
2701 SAN TOMAS EXPRESSWAY
SANTA CLARA, CA 95050, USA

NV_PN	600-1G401-BASE-QS1		
PCB REV	PG401-A02	PAGE	13 OF 37
BOM REV	A	DATE	04-AUG-2014

Page14: GPU PWR and GND

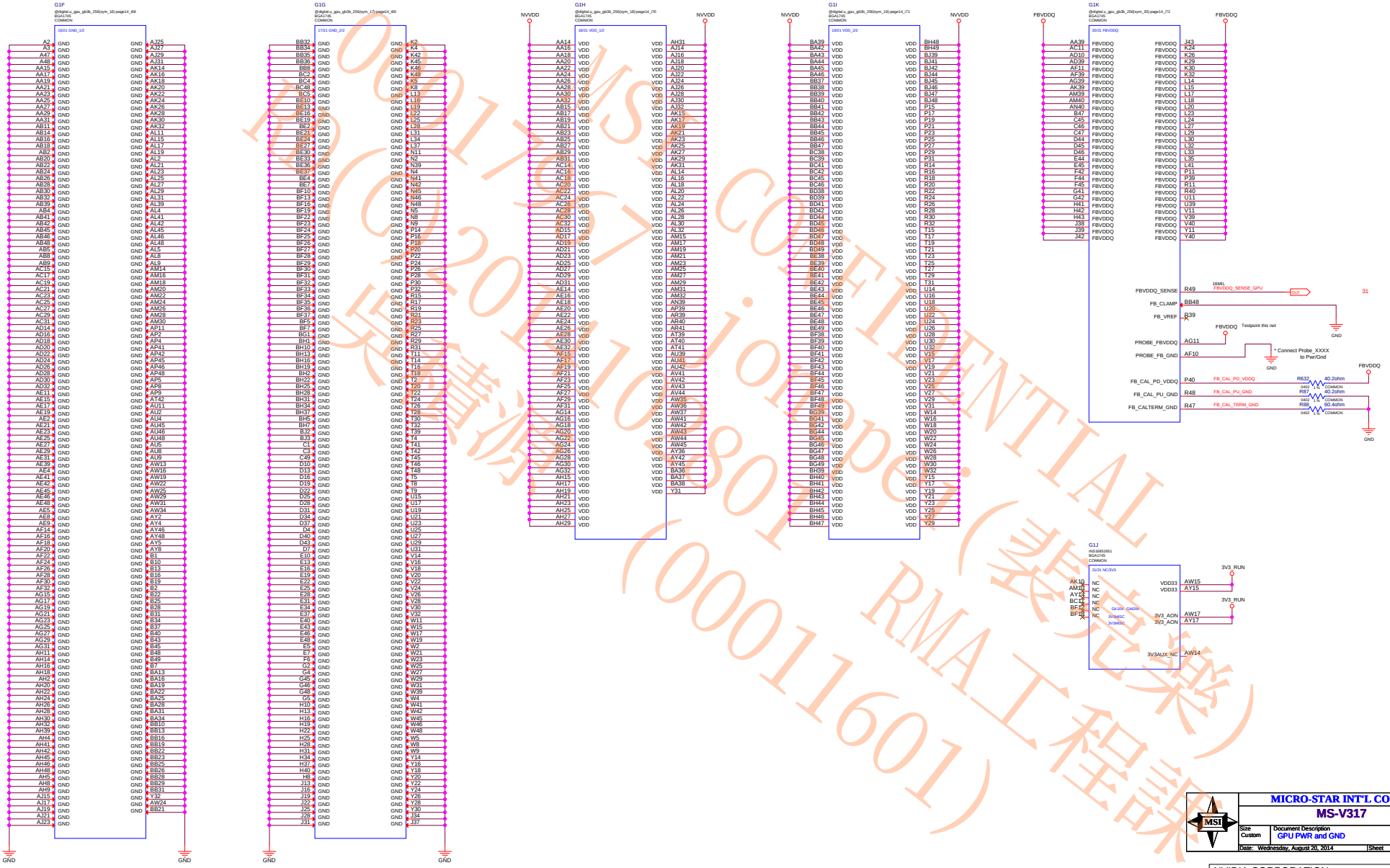

ASSEMBLY	BASE LEVEL GENERIC SCHEMATIC ONLY
PAGE DETAIL	GPU PWR and GND

MICRO-STAR INT'L CO.,LTD

MS-V317

Size	Document Description	Rev
Custom	GPU PWR and GND	1.0

Date: Wednesday, August 20, 2014 | Sheet 14 of 37

NVIDIA CORPORATION
2701 SAN TOMAS EXPRESSWAY
SANTA CLARA, CA 95050, USA

NV_PN	600-1G401-BASE-QS1		
PCB REV	PG401-A02	PAGE	14 OF 37
BOM REV	A	DATE	04-AUG-2014

ALL NVIDIA DESIGN SPECIFICATIONS, REFERENCE SPECIFICATIONS, REFERENCE BOARDS, FILES, DRAWINGS, DIAGNOSTICS, LISTS AND OTHER DOCUMENTS OR INFORMATION (TOGETHER AND SEPARATELY, 'MATERIALS') ARE BEING PROVIDED 'AS IS'. THE MATERIALS MAY CONTAIN KNOWN AND UNKNOWN VIOLATIONS OR DEVIATIONS OF INDUSTRY STANDARDS AND SPECIFICATIONS. NVIDIA MAKES NO WARRANTIES, EXPRESSED, IMPLIED, STATUTORY OR OTHERWISE WITH RESPECT TO THE MATERIALS OR OTHERWISE, AND EXPRESSLY DISCLAIMS ALL IMPLIED WARRANTIES INCLUDING, WITHOUT LIMITATION, THE WARRANTIES OF DESIGN, OF NONINFRINGEMENT, MERCHANTABILITY OR FITNESS FOR A PARTICULAR PURPOSE, OR ARISING FROM A COURSE OF DEALING, TRADE USAGE, TRADE PRACTICE, OR INDUSTRY STANDARDS.

MSI CONFIDENTIAL
RMA工程課
(00011601)

Page15: GPU Decoupling

Based on GB2-X GDDR5 FBVDDQ Decap Guideline

FBVDDQ

0.1uF, 0.47uF & 1uF, 0402 (Place Under GPU)

4.7uF, 0603 (Place Near GPU)

10uF, 0805 (Place Near GPU)

22uF, 0805 (Place Near GPU)

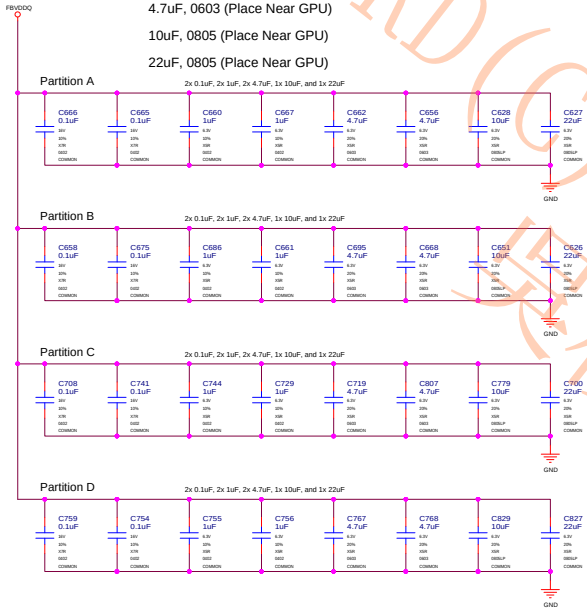

VDD33

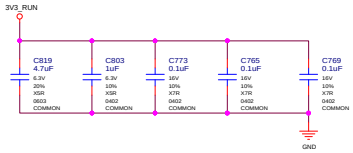

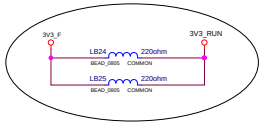

3V3_AON

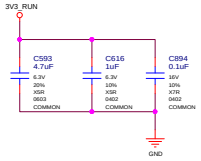

NVVDD Decoupling caps. Place under GPU.

NVVDD

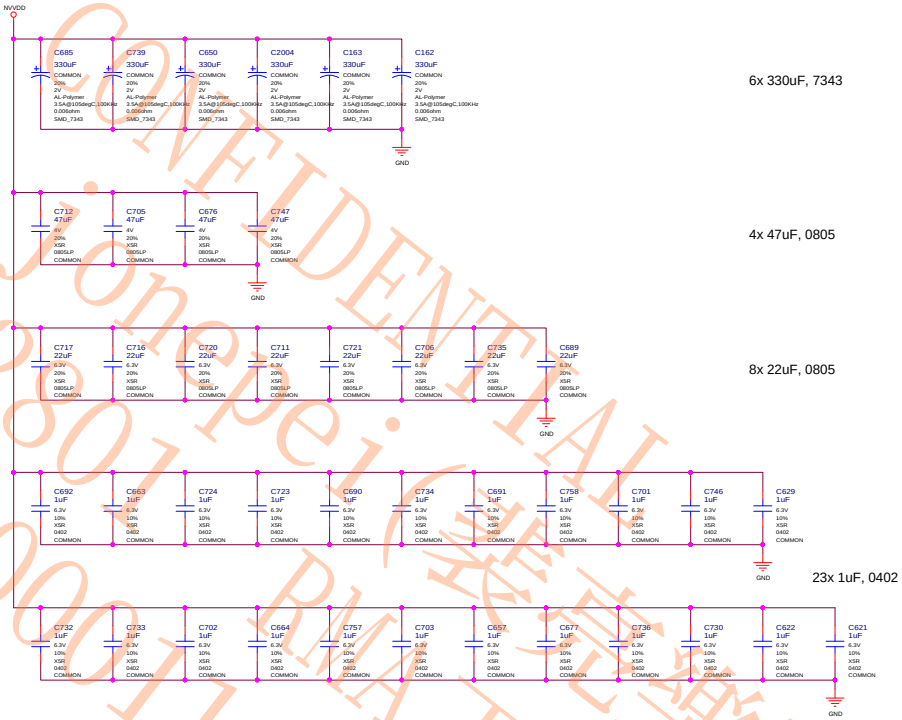

ASSEMBLY	BASE LEVEL GENERIC SCHEMATIC ONLY
PAGE DETAIL	GPU Decoupling

MICRO-STAR INT'L CO.,LTD
MS-V317

Size	Document Description	Rev
Custom	GPU Decoupling	1.0

Date: Wednesday, August 20, 2014 | Sheet 15 of 37

NVIDIA CORPORATION
2701 SAN TOMAS EXPRESSWAY
SANTA CLARA, CA 95050, USA

NV_PN	600-1G401-BASE-QS1		
PCB REV	PG401-A02	PAGE	15 OF 37
BOM REV	A	DATE	04-AUG-2014

ALL NVIDIA DESIGN SPECIFICATIONS, REFERENCE SPECIFICATIONS, REFERENCE BOARDS, FILES, DRAWINGS, DIAGNOSTICS, LISTS AND OTHER DOCUMENTS OR INFORMATION (TOGETHER AND SEPARATELY, 'MATERIALS') ARE BEING PROVIDED 'AS IS'. THE MATERIALS MAY CONTAIN KNOWN AND UNKNOWN VIOLATIONS OR DEVIATIONS OF INDUSTRY STANDARDS AND SPECIFICATIONS. NVIDIA MAKES NO WARRANTIES, EXPRESSED, IMPLIED, STATUTORY OR OTHERWISE WITH RESPECT TO THE MATERIALS OR OTHERWISE, AND EXPRESSLY DISCLAIMS ALL IMPLIED WARRANTIES INCLUDING, WITHOUT LIMITATION, THE WARRANTIES OF DESIGN, OF NONINFRINGEMENT, MERCHANTABILITY OR FITNESS FOR A PARTICULAR PURPOSE, OR ARISING FROM A COURSE OF DEALING, TRADE USAGE, TRADE PRACTICE, OR INDUSTRY STANDARDS.

MSI CONFIDENTIAL
RD(C)2014102801 Jonpei(鍾巨樂)
00017967 BIA工程部(00011601)

Page16: DACA Interface

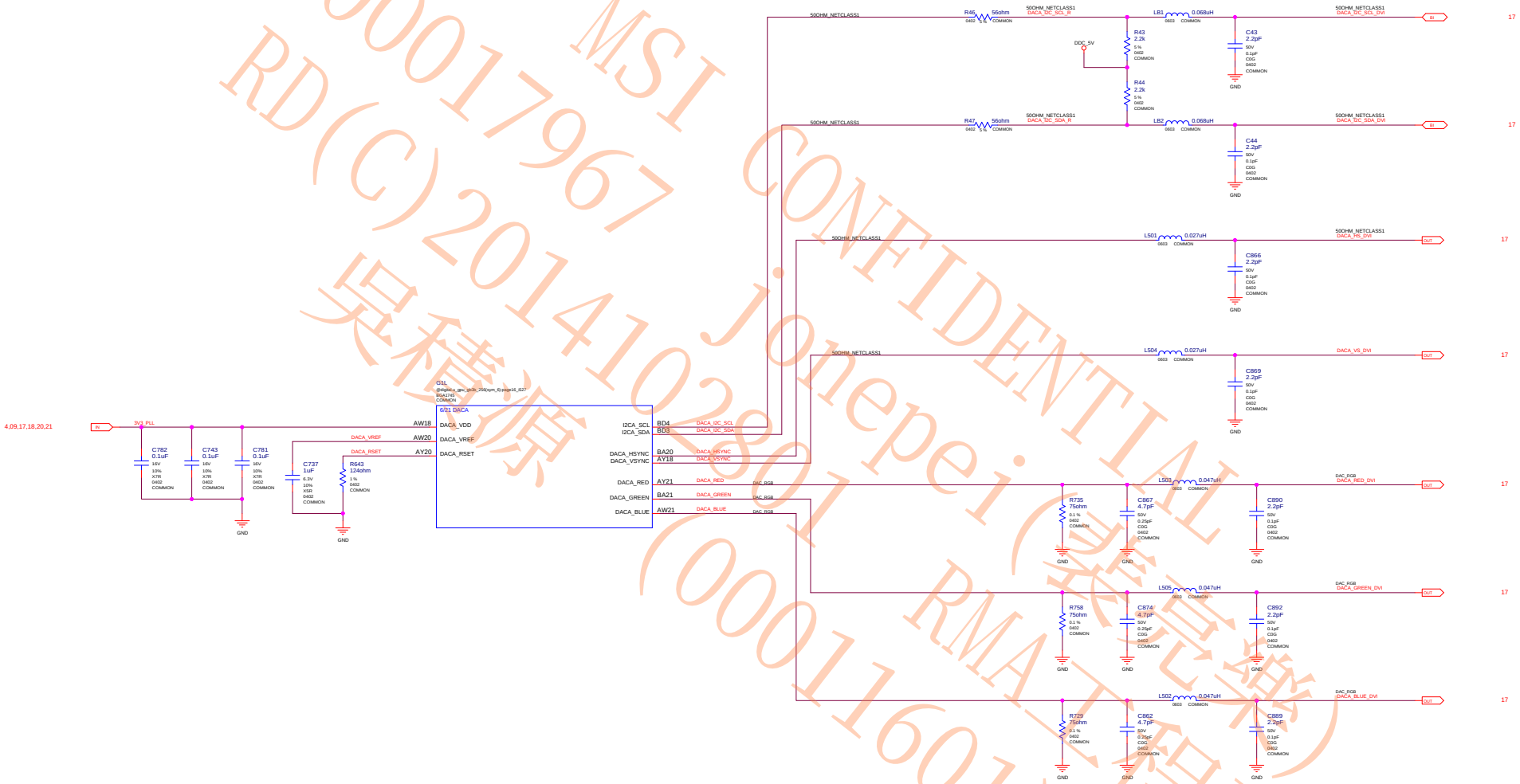

MSI CONFIDENTIAL
0001 7967
RD(C)20141028 Jonepei(吳積源)
(00011601) RMA(工程課)

ASSEMBLY	BASE LEVEL GENERIC SCHEMATIC ONLY
PAGE DETAIL	DACA Interface

ALL NVIDIA DESIGN SPECIFICATIONS, REFERENCE SPECIFICATIONS, REFERENCE BOARDS, FILES, DRAWINGS, DIAGNOSTICS, LISTS AND OTHER DOCUMENTS OR INFORMATION (TOGETHER AND SEPARATELY, 'MATERIALS') ARE BEING PROVIDED 'AS IS'. THE MATERIALS MAY CONTAIN KNOWN AND UNKNOWN VIOLATIONS OR DEVIATIONS OF INDUSTRY STANDARDS AND SPECIFICATIONS. NVIDIA MAKES NO WARRANTIES, EXPRESSED, IMPLIED, STATUTORY OR OTHERWISE WITH RESPECT TO THE MATERIALS OR OTHERWISE, AND EXPRESSLY DISCLAIMS ALL IMPLIED WARRANTIES INCLUDING, WITHOUT LIMITATION, THE WARRANTIES OF DESIGN, OF NONINFRINGEMENT, MERCHANTABILITY OR FITNESS FOR A PARTICULAR PURPOSE, OR ARISING FROM A COURSE OF DEALING, TRADE USAGE, TRADE PRACTICE, OR INDUSTRY STANDARDS.

MICRO-STAR INT'L CO.,LTD

MS-V317

Size	Document Description	Rev
Custom	DACA Interface	1.0

Date: Wednesday, August 20, 2014 | Sheet 16 of 37

NVIDIA CORPORATION
2701 SAN TOMAS EXPRESSWAY
SANTA CLARA, CA 95050, USA

NV_PN	600-1G401-BASE-QS1		
PCB REV	PG401-A02	PAGE	16 OF 37
BOM REV	A	DATE	04-AUG-2014

Page17: IFPAB DVI-I-DL

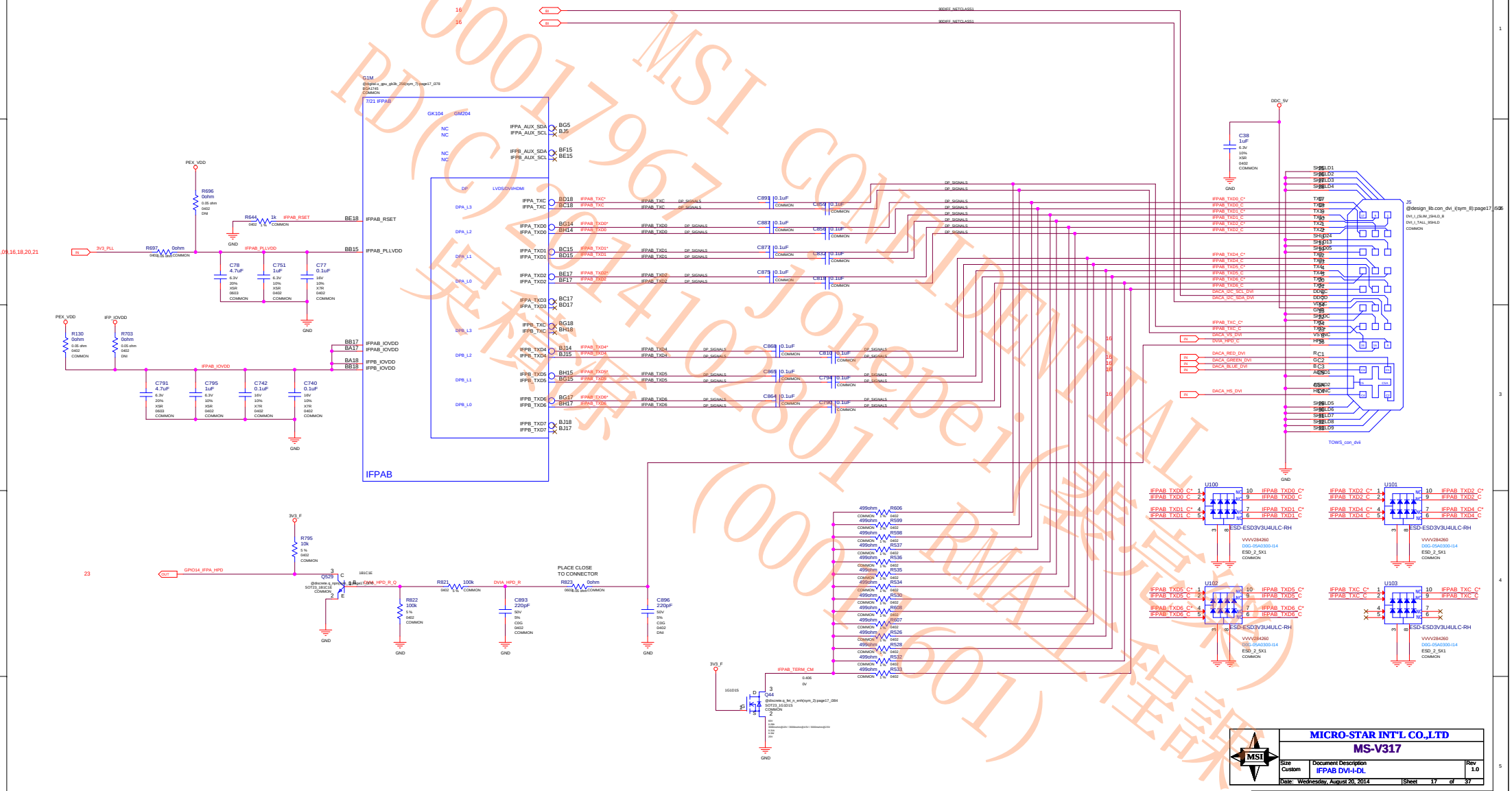

ASSEMBLY	BASE LEVEL GENERIC SCHEMATIC ONLY
PAGE DETAIL	IFPAB DVI-I-DL

ALL NVIDIA DESIGN SPECIFICATIONS, REFERENCE SPECIFICATIONS, REFERENCE BOARDS, FILES, DRAWINGS, DIAGNOSTICS, LISTS AND OTHER DOCUMENTS OR INFORMATION (TOGETHER AND SEPARATELY, 'MATERIALS') ARE BEING PROVIDED 'AS IS'. THE MATERIALS MAY CONTAIN KNOWN AND UNKNOWN VIOLATIONS OR DEVIATIONS OF INDUSTRY STANDARDS AND SPECIFICATIONS. NVIDIA MAKES NO WARRANTIES, EXPRESSED, IMPLIED, STATUTORY OR OTHERWISE WITH RESPECT TO THE MATERIALS OR OTHERWISE, AND EXPRESSLY DISCLAIMS ALL IMPLIED WARRANTIES INCLUDING, WITHOUT LIMITATION, THE WARRANTIES OF DESIGN, OF NONINFRINGEMENT, MERCHANTABILITY OR FITNESS FOR A PARTICULAR PURPOSE, OR ARISING FROM A COURSE OF DEALING, TRADE USAGE, TRADE PRACTICE, OR INDUSTRY STANDARDS.

MICRO-STAR INT'L CO.,LTD

MS-V317

Size	Document Description	Rev
Custom	IFPAB DVI-I-DL	1.0

Date: Wednesday, August 20, 2014 | Sheet 17 of 37

NVIDIA CORPORATION
2701 SAN TOMAS EXPRESSWAY
SANTA CLARA, CA 95050, USA

NV_PN	600-1G401-BASE-QS1		
PCB REV	PG401-A02	PAGE	17 OF 37
BOM REV	A	DATE	04-AUG-2014

MSI CONFIDENTIAL
0001796 7
BD(C)2014102801
Jonepei(0001601)
RMA工程課
(0001601)

Page18: IFPEF with IFPE DP

Two cases to be considered:

1. DP AUX to DP connector: AUX AC coupled
2. DP AUX to DP-DVI dongle: AUX pass through

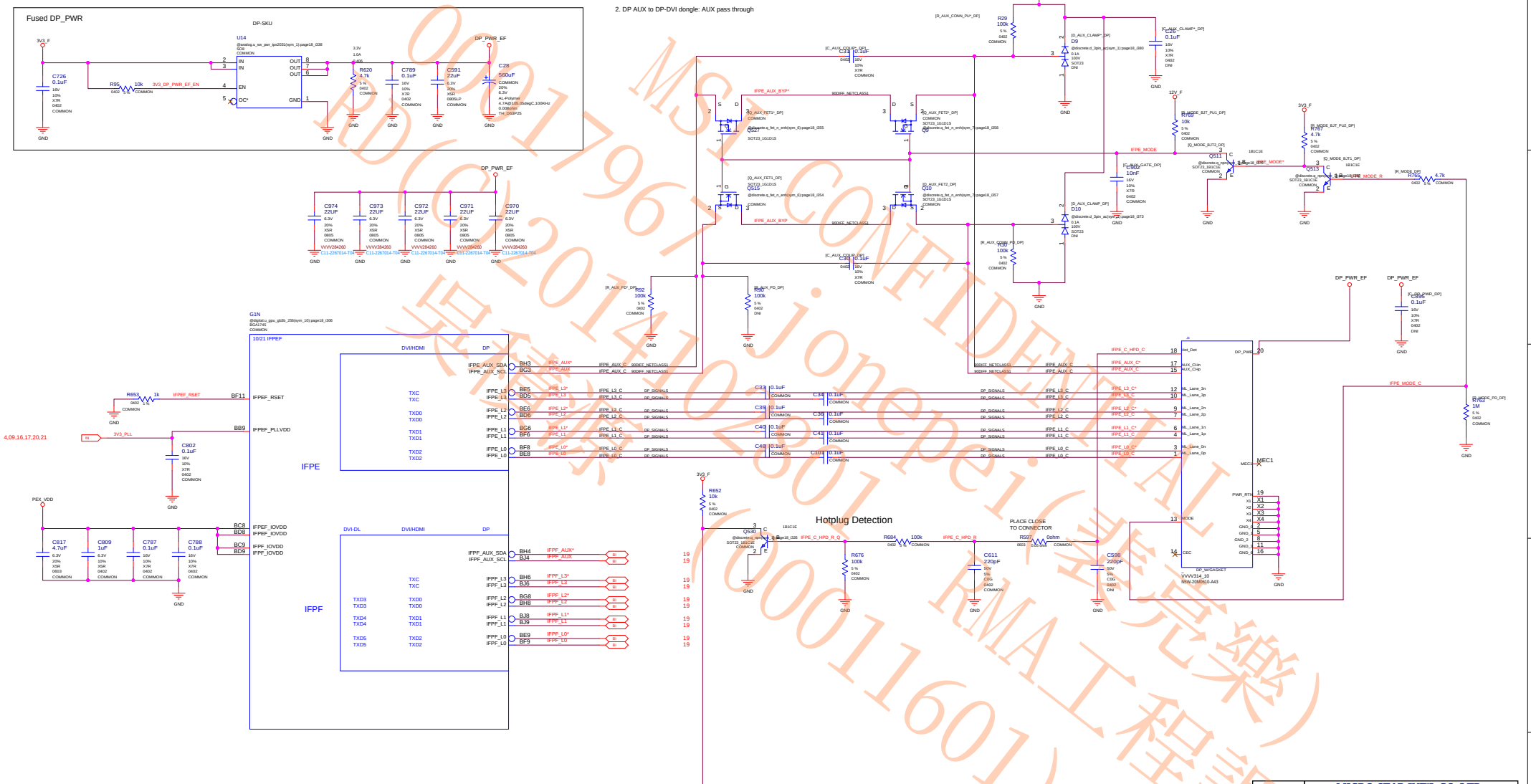

00017967 CONFIDENTIAL
BD(C)2014102801 jonepei(黃完樂)
(00011601) RMA工程課

ASSEMBLY	BASE LEVEL GENERIC SCHEMATIC ONLY
PAGE DETAIL	IFPEF with IFPE DP

MICRO-STAR INT'L CO.,LTD

MS-V317

Size	Document Description	Rev
Custom	IFPEF with IFPE DP	1.0

Date: Wednesday, August 20, 2014 Sheet 18 of 37

NVIDIA CORPORATION
2701 SAN TOMAS EXPRESSWAY
SANTA CLARA, CA 95050, USA

NV_PN	600-1G401-BASE-QS1		
PCB REV	PG401-A02	PAGE	18 OF 37
BOM REV	A	DATE	04-AUG-2014

ALL NVIDIA DESIGN SPECIFICATIONS, REFERENCE SPECIFICATIONS, REFERENCE BOARDS, FILES, DRAWINGS, DIAGNOSTICS, LISTS AND OTHER DOCUMENTS OR INFORMATION (TOGETHER AND SEPARATELY, 'MATERIALS') ARE BEING PROVIDED 'AS IS'. THE MATERIALS MAY CONTAIN KNOWN AND UNKNOWN VIOLATIONS OR DEVIATIONS OF INDUSTRY STANDARDS AND SPECIFICATIONS. NVIDIA MAKES NO WARRANTIES, EXPRESSED, IMPLIED, STATUTORY OR OTHERWISE WITH RESPECT TO THE MATERIALS OR OTHERWISE, AND EXPRESSLY DISCLAIMS ALL IMPLIED WARRANTIES INCLUDING, WITHOUT LIMITATION, THE WARRANTIES OF DESIGN, OF NONINFRINGEMENT, MERCHANTABILITY OR FITNESS FOR A PARTICULAR PURPOSE, OR ARISING FROM A COURSE OF DEALING, TRADE USAGE, TRADE PRACTICE, OR INDUSTRY STANDARDS.

Page19: IFPF DP

Two cases to be considered:

1. DP AUX to DP connector: AUX AC coupled
2. DP AUX to DP-DVI dongle: AUX pass through

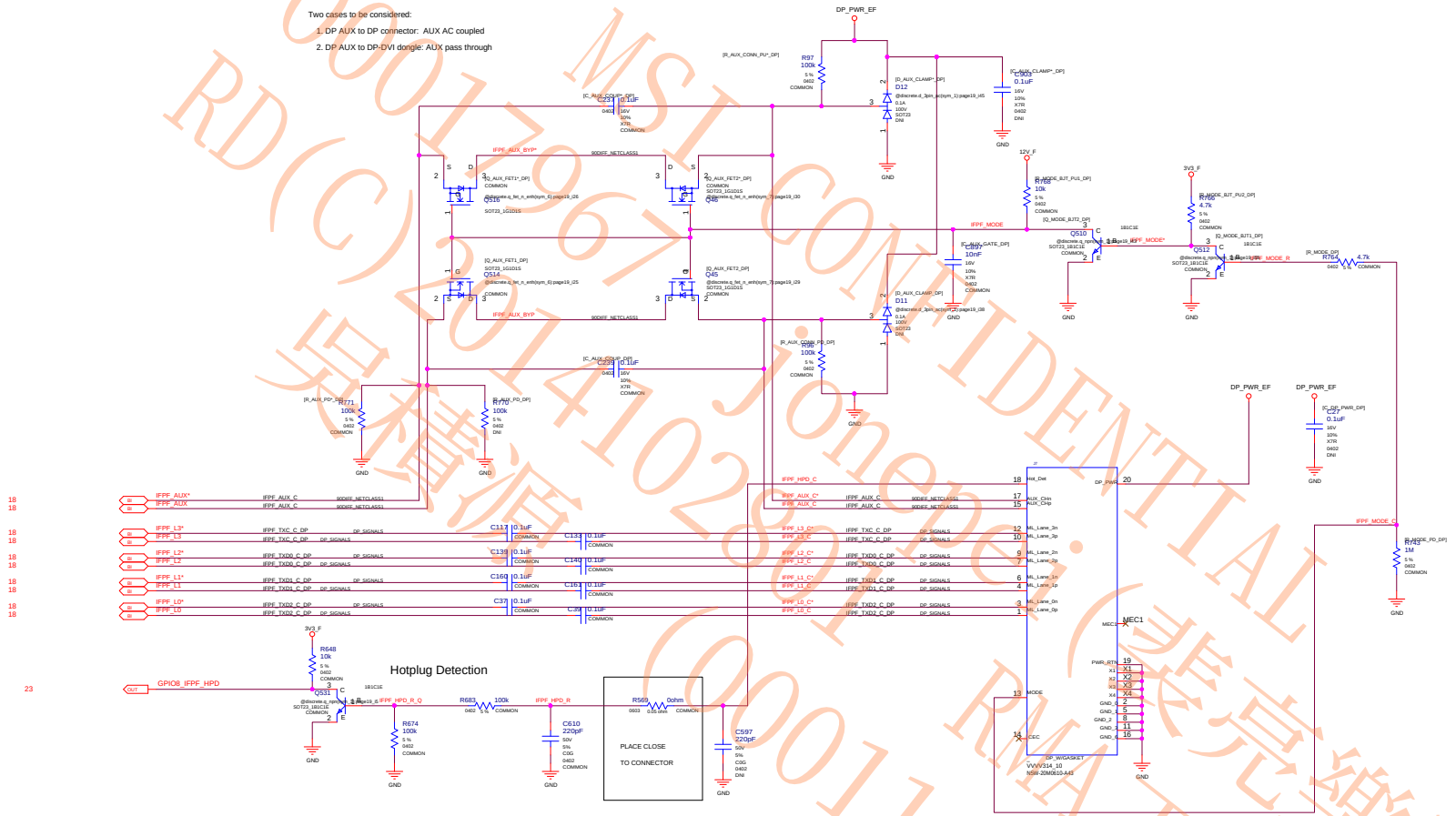

MSI CONFIDENTIAL
RD(C)2014102801(雙亮樂)
吳耀源 (00011601)
RMA工程課

ASSEMBLY	BASE LEVEL GENERIC SCHEMATIC ONLY
PAGE DETAIL	IFPF DP

ALL NVIDIA DESIGN SPECIFICATIONS, REFERENCE SPECIFICATIONS, REFERENCE BOARDS, FILES, DRAWINGS, DIAGNOSTICS, LISTS AND OTHER DOCUMENTS OR INFORMATION (TOGETHER AND SEPARATELY, 'MATERIALS') ARE BEING PROVIDED 'AS IS'. THE MATERIALS MAY CONTAIN KNOWN AND UNKNOWN VIOLATIONS OR DEVIATIONS OF INDUSTRY STANDARDS AND SPECIFICATIONS. NVIDIA MAKES NO WARRANTIES, EXPRESSED, IMPLIED, STATUTORY OR OTHERWISE WITH RESPECT TO THE MATERIALS OR OTHERWISE, AND EXPRESSLY DISCLAIMS ALL IMPLIED WARRANTIES INCLUDING, WITHOUT LIMITATION, THE WARRANTIES OF DESIGN, OF NONINFRINGEMENT, MERCHANTABILITY OR FITNESS FOR A PARTICULAR PURPOSE, OR ARISING FROM A COURSE OF DEALING, TRADE USAGE, TRADE PRACTICE, OR INDUSTRY STANDARDS.

MICRO-STAR INT'L CO.,LTD

MS-V317

Size	Document Description	Rev
Custom	IFPF DP	1.0

Date: Wednesday, August 20, 2014 | Sheet 19 of 37

NVIDIA CORPORATION
2701 SAN TOMAS EXPRESSWAY
SANTA CLARA, CA 95050, USA

NV_PN	600-1G401-BASE-QS1		
PCB REV	PG401-A02	PAGE	19 OF 37
BOM REV	A	DATE	04-AUG-2014

Page20: IFPC HDMI

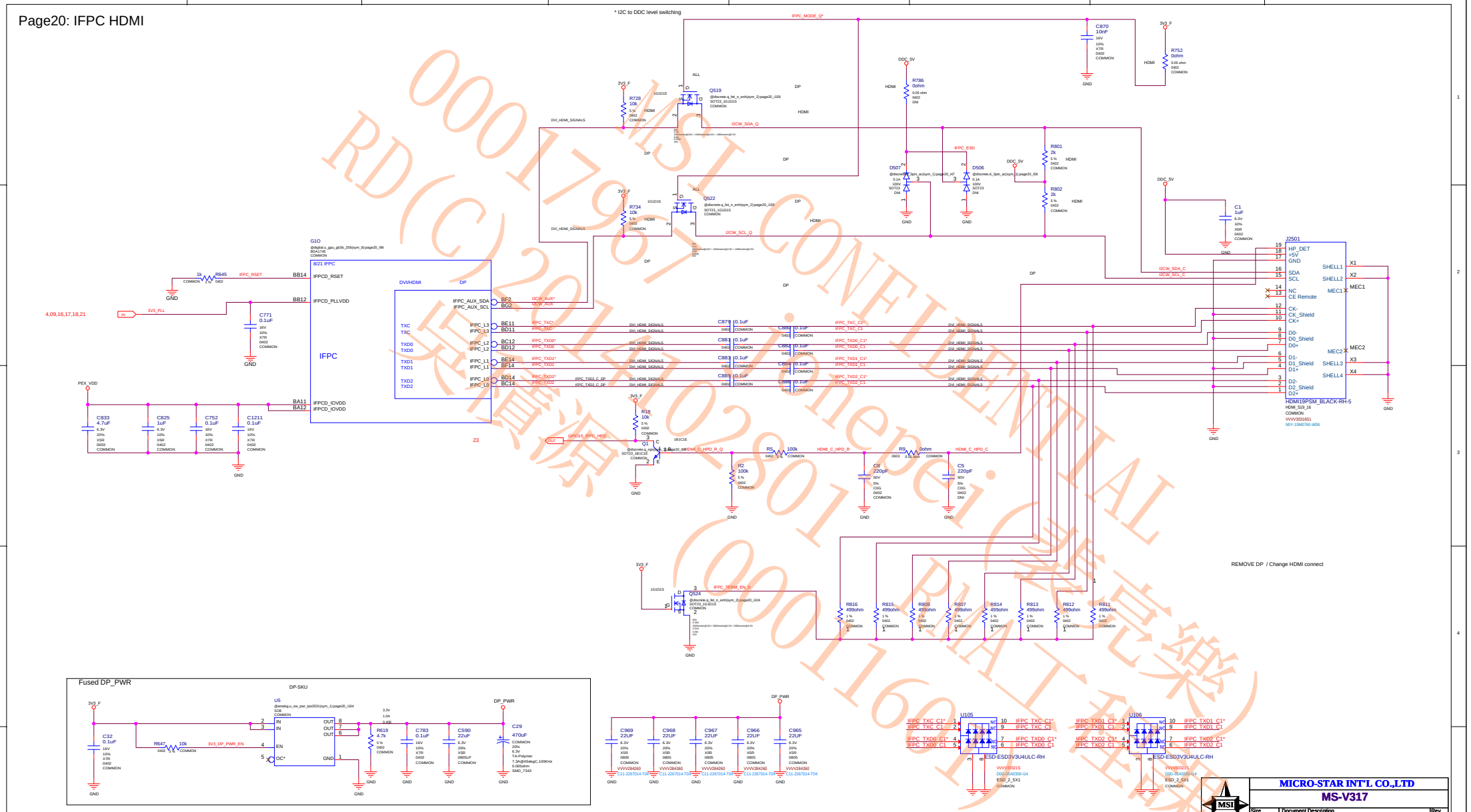

ASSEMBLY	BASE LEVEL GENERIC SCHEMATIC ONLY
PAGE DETAIL	IFPC HDMI/DP

ALL NVIDIA DESIGN SPECIFICATIONS, REFERENCE SPECIFICATIONS, REFERENCE BOARDS, FILES, DRAWINGS, DIAGNOSTICS, LISTS AND OTHER DOCUMENTS OR INFORMATION (TOGETHER AND SEPARATELY, "MATERIALS") ARE BEING PROVIDED "AS IS". THE MATERIALS MAY CONTAIN KNOWN AND UNKNOWN VIOLATIONS OR DEVIATIONS OF INDUSTRY STANDARDS AND SPECIFICATIONS. NVIDIA MAKES NO WARRANTIES, EXPRESSED, IMPLIED, STATUTORY OR OTHERWISE WITH RESPECT TO THE MATERIALS OR OTHERWISE, AND EXPRESSLY DISCLAIMS ALL IMPLIED WARRANTIES INCLUDING, WITHOUT LIMITATION, THE WARRANTIES OF DESIGN, OF NONINFRINGEMENT, MERCHANTABILITY OR FITNESS FOR A PARTICULAR PURPOSE, OR ARISING FROM A COURSE OF DEALING, TRADE USAGE, TRADE PRACTICE, OR INDUSTRY STANDARDS.

MICRO-STAR INT'L CO.,LTD

MS-V317

Size	Document Description	Rev
Custom	IFPC HDMI	1.0

Date: Wednesday, August 20, 2014 Sheet 20 of 37

NVIDIA CORPORATION
2701 SAN TOMAS EXPRESSWAY
SANTA CLARA, CA 95050, USA

NV_PN	600-1G401-BASE-QS1		
PCB REV	PG401-A02	PAGE	20 OF 37
BOM REV	A	DATE	04-AUG-2014

0001796 MSI CONFIDENTIAL
RD(C)2014028 inhepei(餐宝樂)
(0001169) RMA工程樣

Page21: IFPD DP

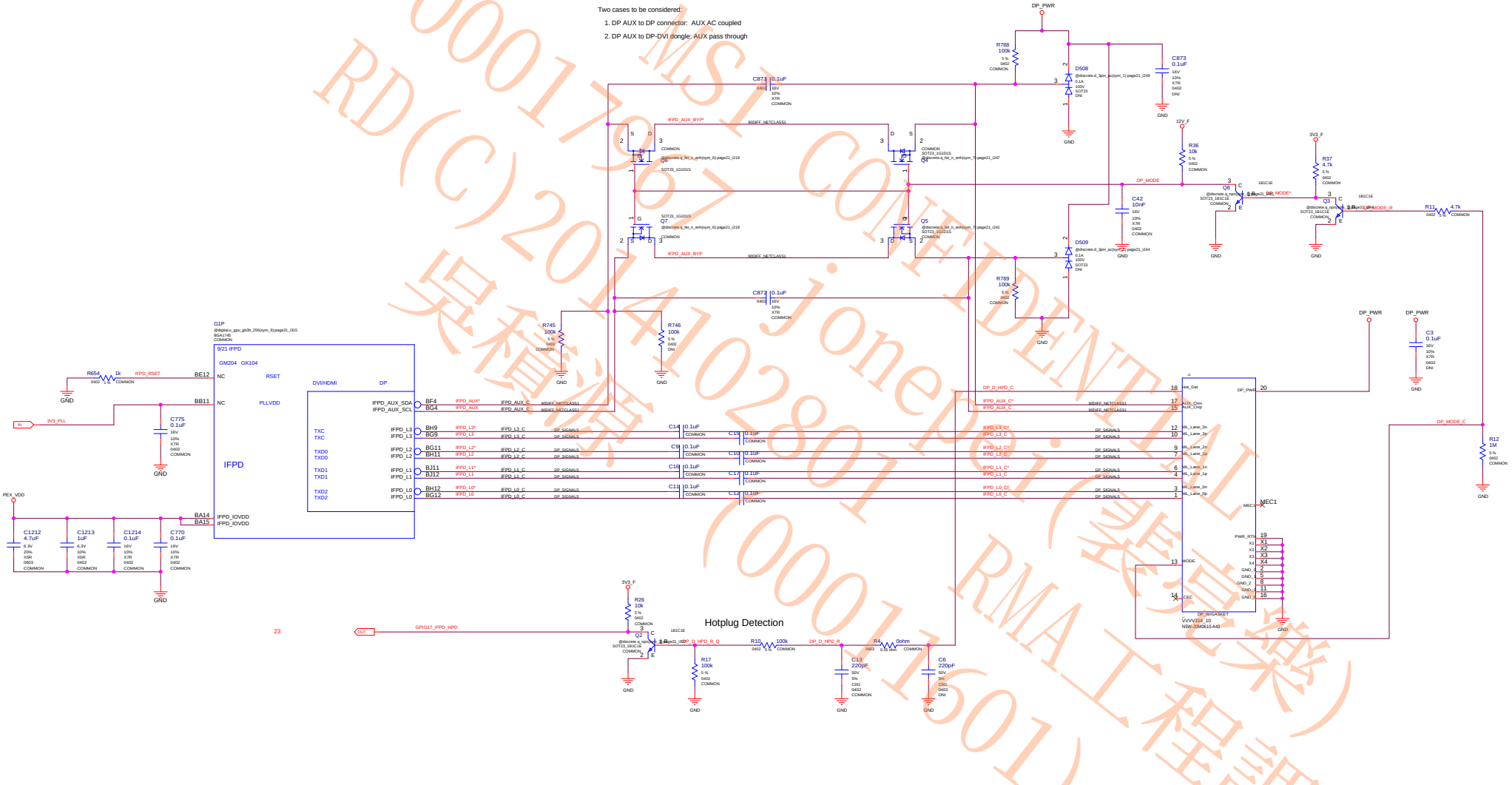

MSI CONFIDENTIAL
00017667
RD(C)2014102801 (Jonepei)
是種樂 (00017601) RMA工程課

ASSEMBLY	BASE LEVEL GENERIC SCHEMATIC ONLY
PAGE DETAIL	IFPD DP

ALL NVIDIA DESIGN SPECIFICATIONS, REFERENCE SPECIFICATIONS, REFERENCE BOARDS, FILES, DRAWINGS, DIAGNOSTICS, LISTS AND OTHER DOCUMENTS OR INFORMATION (TOGETHER AND SEPARATELY, 'MATERIALS') ARE BEING PROVIDED 'AS IS'. THE MATERIALS MAY CONTAIN KNOWN AND UNKNOWN VIOLATIONS OR DEVIATIONS OF INDUSTRY STANDARDS AND SPECIFICATIONS. NVIDIA MAKES NO WARRANTIES, EXPRESSED, IMPLIED, STATUTORY OR OTHERWISE WITH RESPECT TO THE MATERIALS OR OTHERWISE, AND EXPRESSLY DISCLAIMS ALL IMPLIED WARRANTIES INCLUDING, WITHOUT LIMITATION, THE WARRANTIES OF DESIGN, OF NONINFRINGEMENT, MERCHANTABILITY OR FITNESS FOR A PARTICULAR PURPOSE, OR ARISING FROM A COURSE OF DEALING, TRADE USAGE, TRADE PRACTICE, OR INDUSTRY STANDARDS.

MICRO-STAR INT'L CO.,LTD

MS-V317

Size	Document Description	Rev
Custom	IFPD DP	1.0

Date: Wednesday, August 20, 2014 | Sheet 21 of 37

NVIDIA CORPORATION
2701 SAN TOMAS EXPRESSWAY
SANTA CLARA, CA 95050, USA

NV_PN	600-1G401-BASE-QS1		
PCB REV	PG401-A02	PAGE	21 OF 37
BOM REV	A	DATE	04-AUG-2014

Page22: MIOA/B Interface and FRAME LOCK

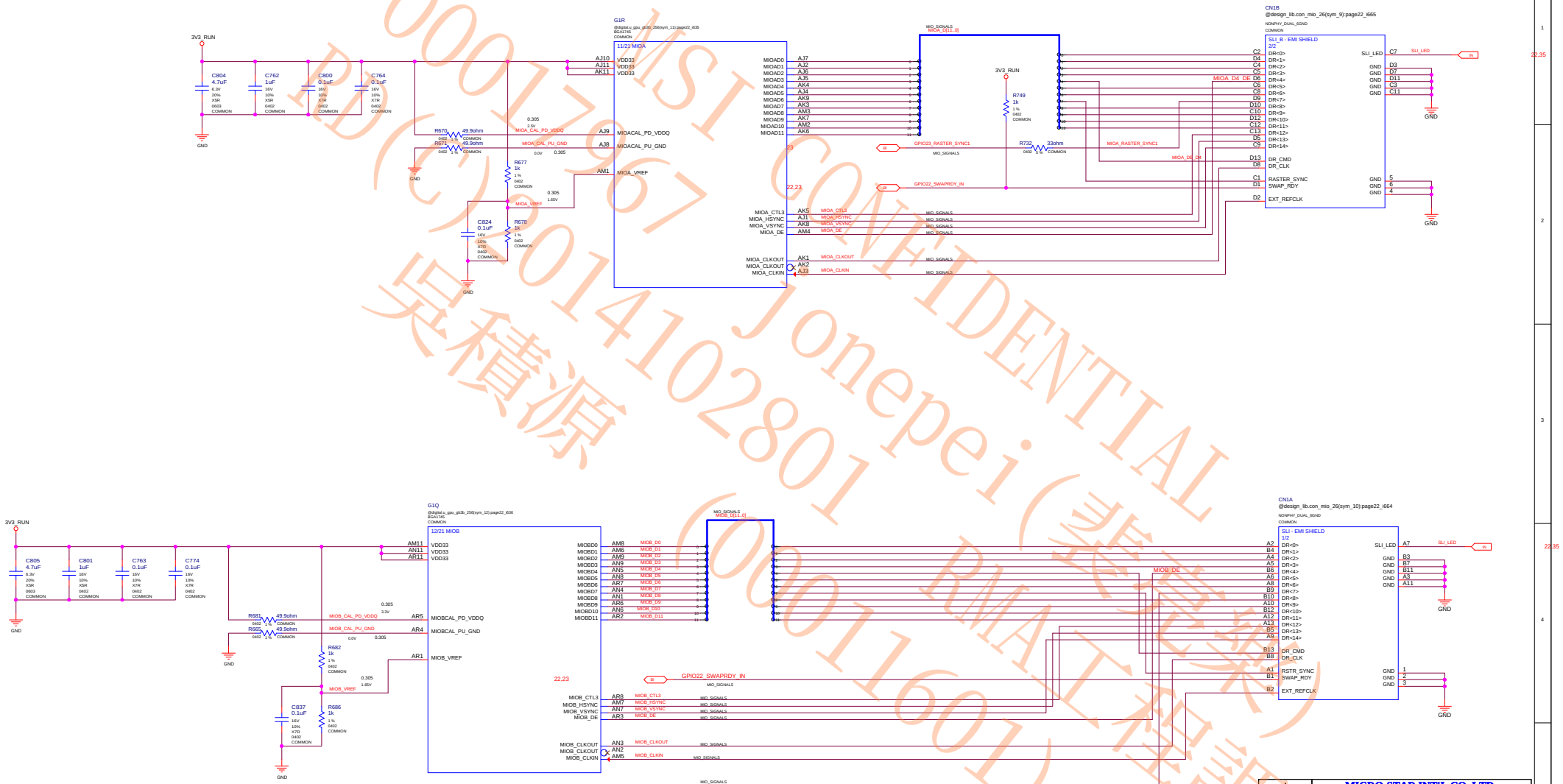

ASSEMBLY	BASE LEVEL GENERIC SCHEMATIC ONLY
PAGE DETAIL	MIOA/B Interface and Frame Lock

MICRO-STAR INT'L CO.,LTD

MS-V317

Size	Document Description	Rev
Custom	MIOA/B Interface and FRAME LOCK	1.0

Date: Wednesday, August 20, 2014 Sheet 22 of 37

NVIDIA CORPORATION
2701 SAN TOMAS EXPRESSWAY
SANTA CLARA, CA 95050, USA

NV_PN	600-1G401-BASE-QS1		
PCB REV	PG401-A02	PAGE	22 OF 37
BOM REV	A	DATE	04-AUG-2014

ALL NVIDIA DESIGN SPECIFICATIONS, REFERENCE SPECIFICATIONS, REFERENCE BOARDS, FILES, DRAWINGS, DIAGNOSTICS, LISTS AND OTHER DOCUMENTS OR INFORMATION (TOGETHER AND SEPARATELY, 'MATERIALS') ARE BEING PROVIDED 'AS IS'. THE MATERIALS MAY CONTAIN KNOWN AND UNKNOWN VIOLATIONS OR DEVIATIONS OF INDUSTRY STANDARDS AND SPECIFICATIONS. NVIDIA MAKES NO WARRANTIES, EXPRESSED, IMPLIED, STATUTORY OR OTHERWISE WITH RESPECT TO THE MATERIALS OR OTHERWISE, AND EXPRESSLY DISCLAIMS ALL IMPLIED WARRANTIES INCLUDING, WITHOUT LIMITATION, THE WARRANTIES OF DESIGN, OF NONINFRINGEMENT, MERCHANTABILITY OR FITNESS FOR A PARTICULAR PURPOSE, OR ARISING FROM A COURSE OF DEALING, TRADE USAGE, TRADE PRACTICE, OR INDUSTRY STANDARDS.

0001767 MSI CONFIDENTIAL
PD(C)2014102801 Jonepei(黃俊霖)
兵積源 RMA工程課 (0001601)

Page23: MISC1: Fan, Thermal, JTAG, GPIO, STEREO

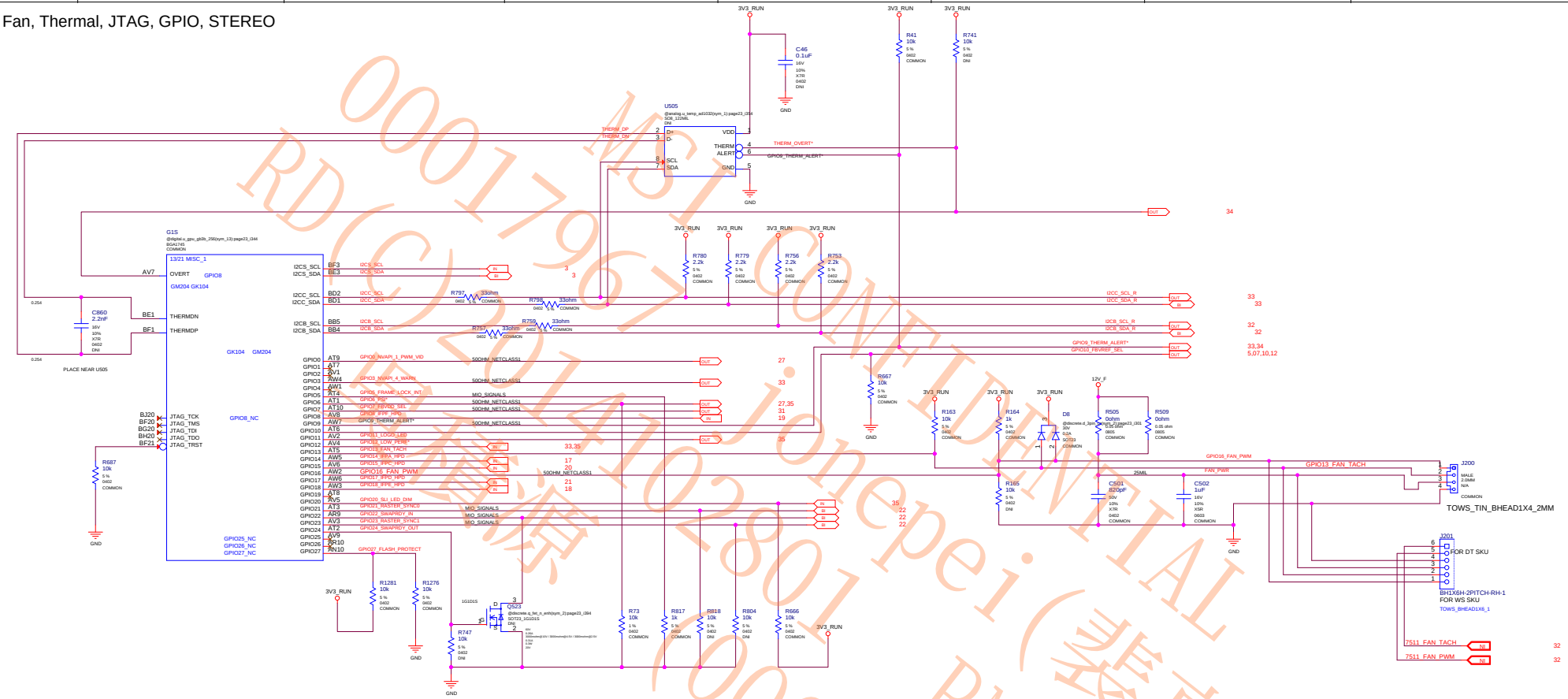

MSI CONFIDENTIAL
RD(C)2014102801 (Jonepei(裝亮樂)
0001796 (0001160 1)
RMA工程部

ASSEMBLY	BASE LEVEL GENERIC SCHEMATIC ONLY
PAGE DETAIL	MISC1: Fan, Thermal, JTAG, GPIO, Stereo

ALL NVIDIA DESIGN SPECIFICATIONS, REFERENCE SPECIFICATIONS, REFERENCE BOARDS, FILES, DRAWINGS, DIAGNOSTICS, LISTS AND OTHER DOCUMENTS OR INFORMATION (TOGETHER AND SEPARATELY, 'MATERIALS') ARE BEING PROVIDED 'AS IS'. THE MATERIALS MAY CONTAIN KNOWN AND UNKNOWN VIOLATIONS OR DEVIATIONS OF INDUSTRY STANDARDS AND SPECIFICATIONS. NVIDIA MAKES NO WARRANTIES, EXPRESSED, IMPLIED, STATUTORY OR OTHERWISE WITH RESPECT TO THE MATERIALS OR OTHERWISE, AND EXPRESSLY DISCLAIMS ALL IMPLIED WARRANTIES INCLUDING, WITHOUT LIMITATION, THE WARRANTIES OF DESIGN, OF NONINFRINGEMENT, MERCHANTABILITY OR FITNESS FOR A PARTICULAR PURPOSE, OR ARISING FROM A COURSE OF DEALING, TRADE USAGE, TRADE PRACTICE, OR INDUSTRY STANDARDS.

MICRO-STAR INT'L CO.,LTD

MS-V317

Size	Document Description	Rev
Custom	MISC1: Fan, Thermal, JTAG, GPIO, STEREO	1.0

Date: Wednesday, August 20, 2014 Sheet 23 of 37

NVIDIA CORPORATION
2701 SAN TOMAS EXPRESSWAY
SANTA CLARA, CA 95050, USA

NV_PN	600-1G401-BASE-QS1		
PCB REV	PG401-A02	PAGE	23 OF 37
BOM REV	A	DATE	04-AUG-2014

Page24: MISC2: ROM, XTAL, Straps

	KEPLER			MAXWELL		
STRAP0	USER_BIT [3:0]*	0000*	5K PD*	GC6	SEE TABLE BELOW	
STRAP1	3GIO_PADCFG_LUT_ADR*	0000*	5K PD Desktop*			
STRAP2	PCI_DEVID [3:0]*	0100 - (0x1184)*	25K PD -42S GPU*			
STRAP3	SOR_EXPOSED [3:0]*	1111*	45K PU*			
STRAP4	DP_PLL_VDD_33V*	1*	FOR 3_3V*			
	PEX_MAX_SPEED*	1*	FOR GEN2/3*			
	PEX_SPD_CHANGE_GEN3*	1*	ENABLED*			
	*					
ROM_SI	RAMCFG[0]*	1*		RAMCFG[0]*	1*	
	RAMCFG[1]*	1*	0111 for 64Mx32 256 bit SAMSUNG SAMSUNG for SKU 0 primary memory	RAMCFG[1]*	1*	20K PD*
	RAMCFG[2]*	1*	45K PD*	RAMCFG[2]*	0*	
	RAMCFG[3]*	0*		RAMCFG[3]*	0*	
ROM_SO	VGA_DEVICE*	1*		VGA_DEVICE*	1*	
	SMB_ALT_ADDR*	0*	30k PD*	SMB_ALT_ADDR*	0*	10K PD*
	FB[0]_APERTURE_SIZE*	1*	For 128MB*	PCIE_CFG*	0*	
	FB[1]_APERTURE_SIZE*	0*	For 128MB*	DEVID_SEL*	0*	
ROM_SCLK	PEX_PLL_EN_TERM100*	0*	DISABLED*	SOR0_EXPOSED*	1*	
	PCI_DEVID_EXT[5]*	0*	For 0x1184*	SOR1_EXPOSED*	1*	45K PU*
	SUB_VENDOR*	1*	Dedicated BIOS*	SOR2_EXPOSED*	1*	
	PCI_DEVID_EXT[4]*	0*	For 0x1184*	SOR3_EXPOSED*	1*	

0x13C0

MULTI_STRAP_REF0_GND

BINARY PRODUCTION	NC
BINARY BRINGUP	NC
MULTI-LEVEL	40.2k 1% TO GND

MAXWELL

STRAP0

3.3V	1.65V	0V
GC6+ ISLAND ENABLED	GC6+ DEBUG MODE	GC6+ ISLAND DISABLED

KEPLER

	GND	3V3
5k	0000	1000
10k	0001	1001
15k	0010	1010
20k	0011	1011
25k	0100	1100
30k	0101	1101
35k	0110	1110
45k	0111	1111

CFG[3:0]	Config Width	Vendor
0000	Reserved	
0001	32Mx32 256-bit Elpida	
0010	32Mx32 256-bit Hynix	
0011	32Mx32 256-bit Samsung	
0100	Reserved	
0101	64Mx32 256-bit Elpida	
0110	64Mx32 256-bit Hynix	
0111	64Mx32 256-bit Samsung	
1000	Reserved	
1001	32Mx32 192-bit Elpida	
1010	32Mx32 192-bit Hynix	
1011	32Mx32 192-bit Samsung	
1100	Reserved	
1101	64Mx32 192-bit Elpida	
1110	64Mx32 192-bit Hynix	
1111	64Mx32 192-bit Samsung	

MAXWELL

CFG[3:0]	Config Width	Vendor
0000	Reserved	
0001	128Mx32 256-bit Elpida	
0010	128Mx32 256-bit Hynix	
0011	128Mx32 256-bit Samsung	
0100	Reserved	
0101	64Mx32 256-bit Elpida	
0110	64Mx32 256-bit Hynix	
0111	64Mx32 256-bit Samsung	

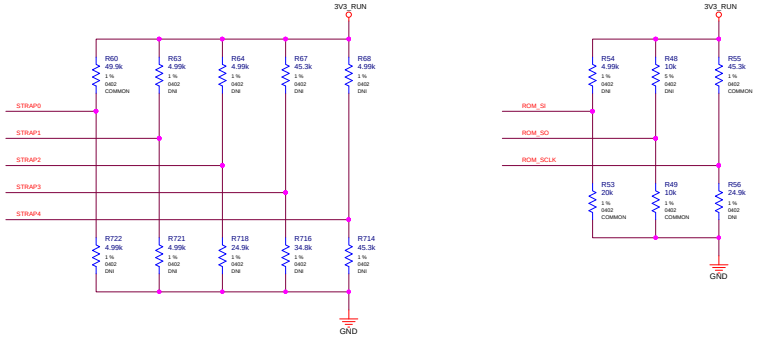

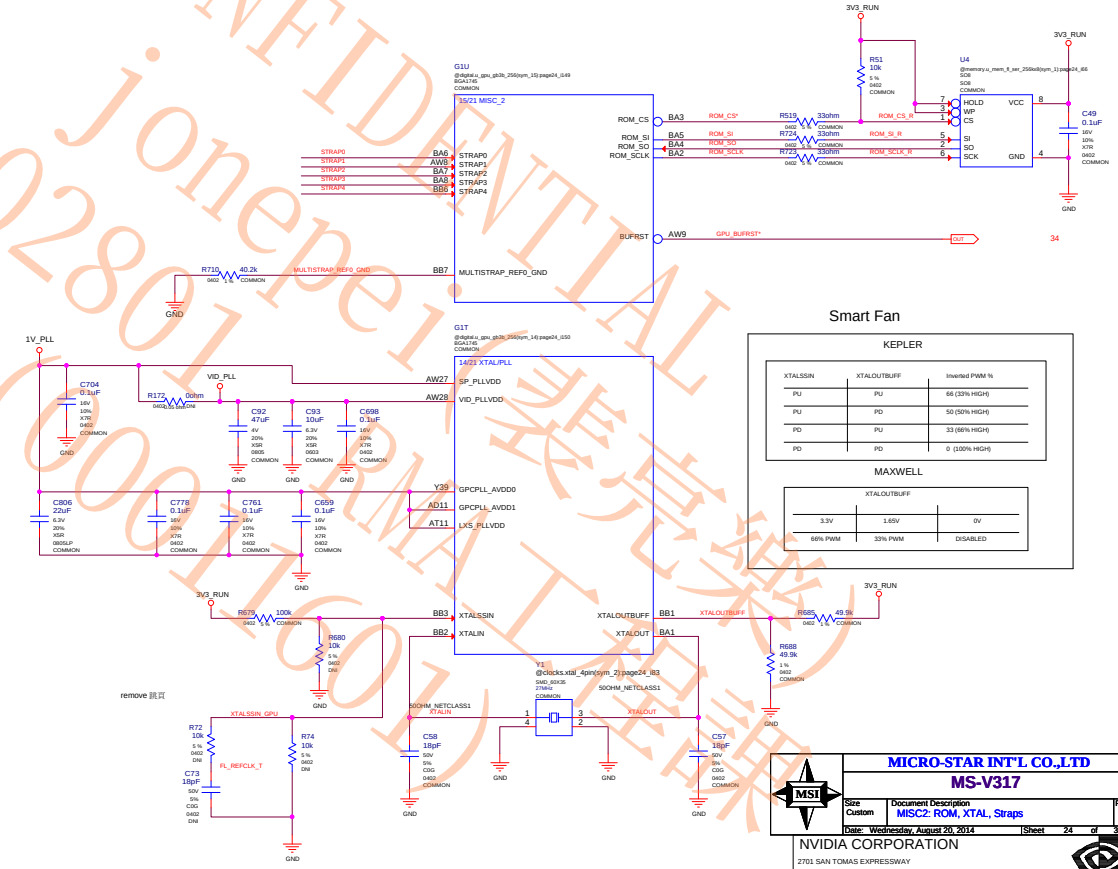

Smart Fan

KEPLER

XTALSSIN	XTALOUTBUFF	Inverted PWM %
PU	PU	66 (33% HIGH)
PU	PD	50 (50% HIGH)
PD	PU	33 (66% HIGH)
PD	PD	0 (100% HIGH)

MAXWELL

XTALOUTBUFF

3.3V	1.65V	0V
66% PWM	33% PWM	DISABLED

ASSEMBLY	BASE LEVEL GENERIC SCHEMATIC ONLY
PAGE DETAIL	MISC2: ROM, XTAL, Straps

ALL NVIDIA DESIGN SPECIFICATIONS, REFERENCE SPECIFICATIONS, REFERENCE BOARDS, FILES, DRAWINGS, DIAGNOSTICS, LISTS AND OTHER DOCUMENTS OR INFORMATION (TOGETHER AND SEPARATELY, "MATERIALS") ARE BEING PROVIDED "AS IS". THE MATERIALS MAY CONTAIN KNOWN AND UNKNOWN VIOLATIONS OR DEVIATIONS OF INDUSTRY STANDARDS AND SPECIFICATIONS. NVIDIA MAKES NO WARRANTIES, EXPRESSED, IMPLIED, STATUTORY OR OTHERWISE WITH RESPECT TO THE MATERIALS OR OTHERWISE, AND EXPRESSLY DISCLAIMS ALL IMPLIED WARRANTIES INCLUDING, WITHOUT LIMITATION, THE WARRANTIES OF DESIGN, OF NONINFRINGEMENT, MERCHANTABILITY OR FITNESS FOR A PARTICULAR PURPOSE, OR ARISING FROM A COURSE OF DEALING, TRADE USAGE, TRADE PRACTICE, OR INDUSTRY STANDARDS.

MICRO-STAR INT'L CO.,LTD

MS-V317

Size	Document Description	Rev
Custom	MISC2: ROM, XTAL, Straps	1.0

Date: Wednesday, August 20, 2014 Sheet 24 of 37

NVIDIA CORPORATION
2701 SAN TOMAS EXPRESSWAY
SANTA CLARA, CA 95050, USA

NV_PN	600-1G401-BASE-QS1		
PCB REV	PG401-A02	PAGE	24 OF 37
BOM REV	A	DATE	04-AUG-2014

MSI CONFIDENTIAL
00017967
jonepei
RD(C)20141028013
(00017601)
台積源 裝潢 工程

Page25: PS: 5V, PEX_VDD

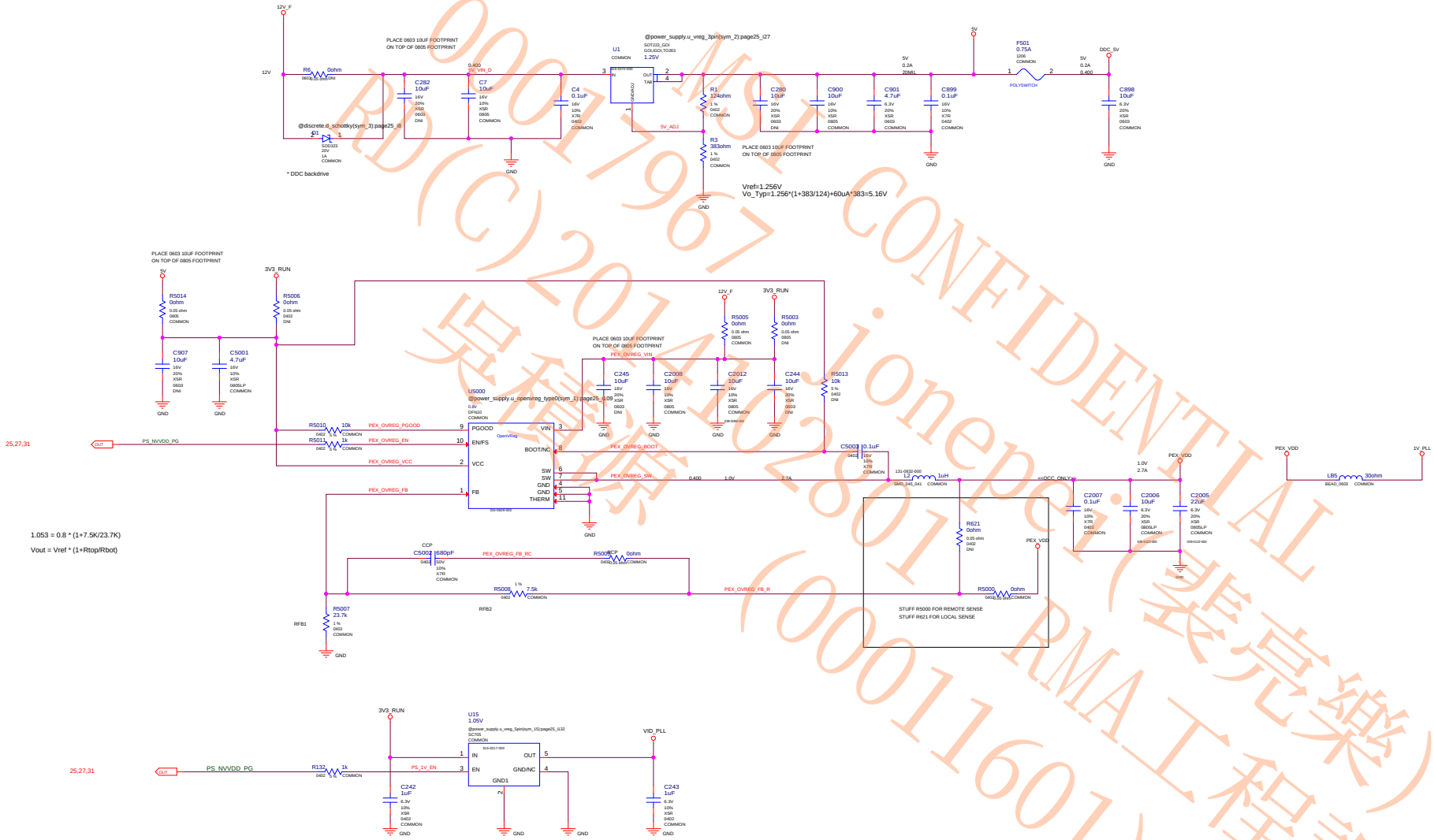

ASSEMBLY	BASE LEVEL GENERIC SCHEMATIC ONLY
PAGE DETAIL	PS: 5V, PEX_VDD

ALL NVIDIA DESIGN SPECIFICATIONS, REFERENCE SPECIFICATIONS, REFERENCE BOARDS, FILES, DRAWINGS, DIAGNOSTICS, LISTS AND OTHER DOCUMENTS OR INFORMATION (TOGETHER AND SEPARATELY, "MATERIALS") ARE BEING PROVIDED "AS IS". THE MATERIALS MAY CONTAIN KNOWN AND UNKNOWN VIOLATIONS OR DEVIATIONS OF INDUSTRY STANDARDS AND SPECIFICATIONS. NVIDIA MAKES NO WARRANTIES, EXPRESSED, IMPLIED, STATUTORY OR OTHERWISE WITH RESPECT TO THE MATERIALS OR OTHERWISE, AND EXPRESSLY DISCLAIMS ALL IMPLIED WARRANTIES INCLUDING, WITHOUT LIMITATION, THE WARRANTIES OF DESIGN, OF NONINFRINGEMENT, MERCHANTABILITY OR FITNESS FOR A PARTICULAR PURPOSE, OR ARISING FROM A COURSE OF DEALING, TRADE USAGE, TRADE PRACTICE, OR INDUSTRY STANDARDS.

MICRO-STAR INT'L CO.,LTD

MS-V317

Size	Document Description	Rev
Custom	PS: 5V, PEX_VDD	1.0

Date: Wednesday, August 20, 2014 | Sheet 25 of 37

NVIDIA CORPORATION
2701 SAN TOMAS EXPRESSWAY
SANTA CLARA, CA 95050, USA

NV_PN	600-1G401-BASE-QS1		
PCB REV	PG401-A02	PAGE	25 OF 37
BOM REV	A	DATE	04-AUG-2014

0001796 MSI CONFIDENTIAL
RD(C)2014102801 (onepei)(裴亮樂)
是樣品 (00011601) RMA工程師

Page26: NA

MSI CONFIDENTIAL
00017967 jonepei(裴亮樂)
RD(C)20141028 01 RMA工程部
吳積源 (00011601)

MICRO-STAR INT'L CO.,LTD	
MS-V317	
Size: Custom	Document Description: NA
Rev: 1.0	
Date: Wednesday, August 20, 2014	Sheet 26 of 37

NVIDIA CORPORATION
2701 SAN TOMAS EXPRESSWAY
SANTA CLARA, CA 95050, USA

ASSEMBLY	BASE LEVEL GENERIC SCHEMATIC ONLY
PAGE DETAIL	PS: FBVDDIQ

NV_PN	600-1G401-BASE-QS1		
PCB REV	PG401-A02	PAGE	26 OF 37
BOM REV	A	DATE	04-AUG-2014

ALL NVIDIA DESIGN SPECIFICATIONS, REFERENCE SPECIFICATIONS, REFERENCE BOARDS, FILES, DRAWINGS, DIAGNOSTICS, LISTS AND OTHER DOCUMENTS OR INFORMATION (TOGETHER AND SEPARATELY, 'MATERIALS') ARE BEING PROVIDED 'AS IS'. THE MATERIALS MAY CONTAIN KNOWN AND UNKNOWN VIOLATIONS OR DEVIATIONS OF INDUSTRY STANDARDS AND SPECIFICATIONS. NVIDIA MAKES NO WARRANTIES, EXPRESSED, IMPLIED, STATUTORY OR OTHERWISE WITH RESPECT TO THE MATERIALS OR OTHERWISE, AND EXPRESSLY DISCLAIMS ALL IMPLIED WARRANTIES INCLUDING, WITHOUT LIMITATION, THE WARRANTIES OF DESIGN, OF NONINFRINGEMENT, MERCHANTABILITY OR FITNESS FOR A PARTICULAR PURPOSE, OR ARISING FROM A COURSE OF DEALING, TRADE USAGE, TRADE PRACTICE, OR INDUSTRY STANDARDS.

Page27: PS: NVVDD Controller

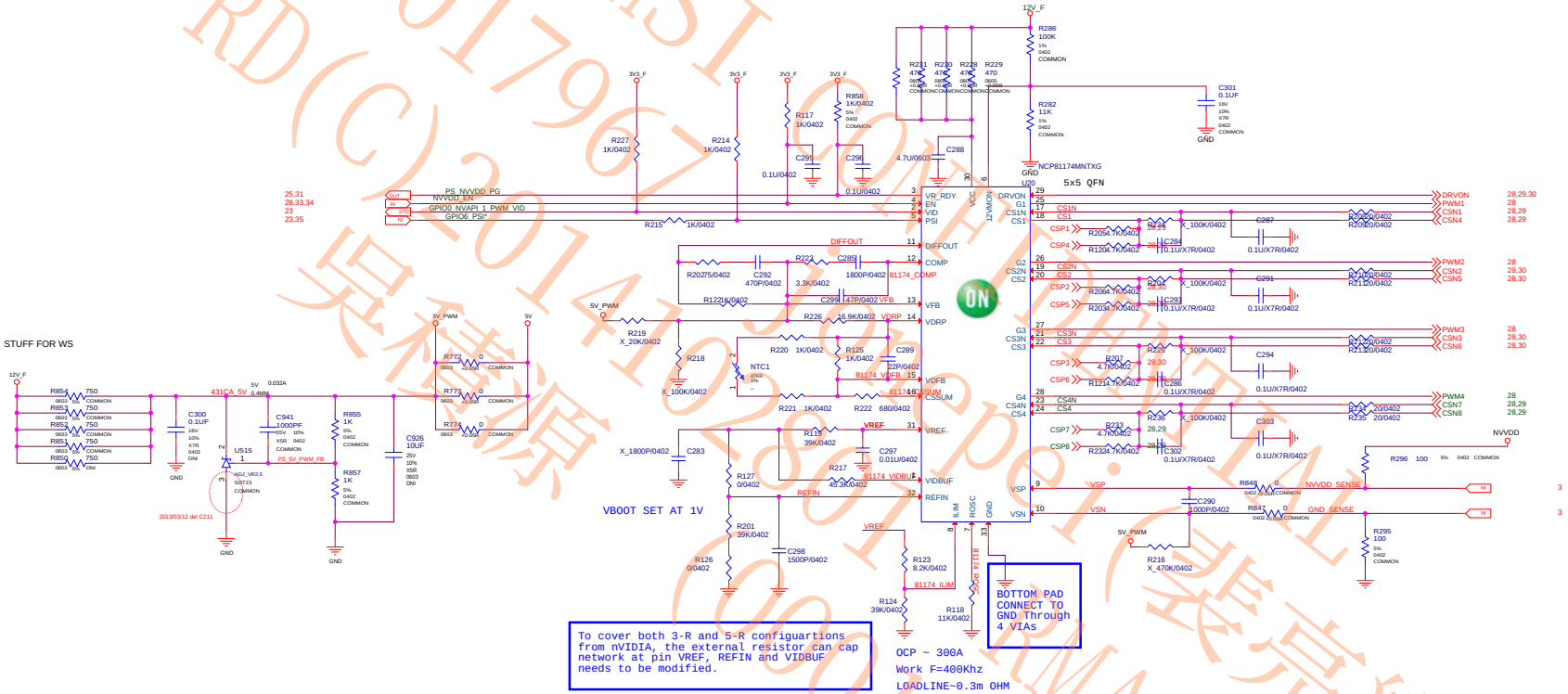

ASSEMBLY	BASE LEVEL GENERIC SCHEMATIC ONLY
PAGE DETAIL	PS: NVVDD Controller

ALL NVIDIA DESIGN SPECIFICATIONS, REFERENCE SPECIFICATIONS, REFERENCE BOARDS, FILES, DRAWINGS, DIAGNOSTICS, LISTS AND OTHER DOCUMENTS OR INFORMATION (TOGETHER AND SEPARATELY, 'MATERIALS') ARE BEING PROVIDED 'AS IS'. THE MATERIALS MAY CONTAIN KNOWN AND UNKNOWN VIOLATIONS OR DEVIATIONS OF INDUSTRY STANDARDS AND SPECIFICATIONS. NVIDIA MAKES NO WARRANTIES, EXPRESSED, IMPLIED, STATUTORY OR OTHERWISE WITH RESPECT TO THE MATERIALS OR OTHERWISE, AND EXPRESSLY DISCLAIMS ALL IMPLIED WARRANTIES INCLUDING, WITHOUT LIMITATION, THE WARRANTIES OF DESIGN, OF NONINFRINGEMENT, MERCHANTABILITY OR FITNESS FOR A PARTICULAR PURPOSE, OR ARISING FROM A COURSE OF DEALING, TRADE USAGE, TRADE PRACTICE, OR INDUSTRY STANDARDS.

MICRO-STAR INT'L CO.,LTD

MS-V317

Size	Document Description	Rev
Custom	PS: NVVDD Controller	1.0

Date: Wednesday, August 20, 2014 Sheet 27 of 37

NVIDIA CORPORATION
2701 SAN TOMAS EXPRESSWAY
SANTA CLARA, CA 95050, USA

NV_PN	600-1G401-BASE-QS1		
PCB REV	PG401-A02	PAGE	27 OF 37
BOM REV	A	DATE	04-AUG-2014

MSI 00017967 RD(C)2014 (00011601) 吳禮源 (裝亮樂) RMA工程部

Page28: NVVDD PHASE DOUBLERS

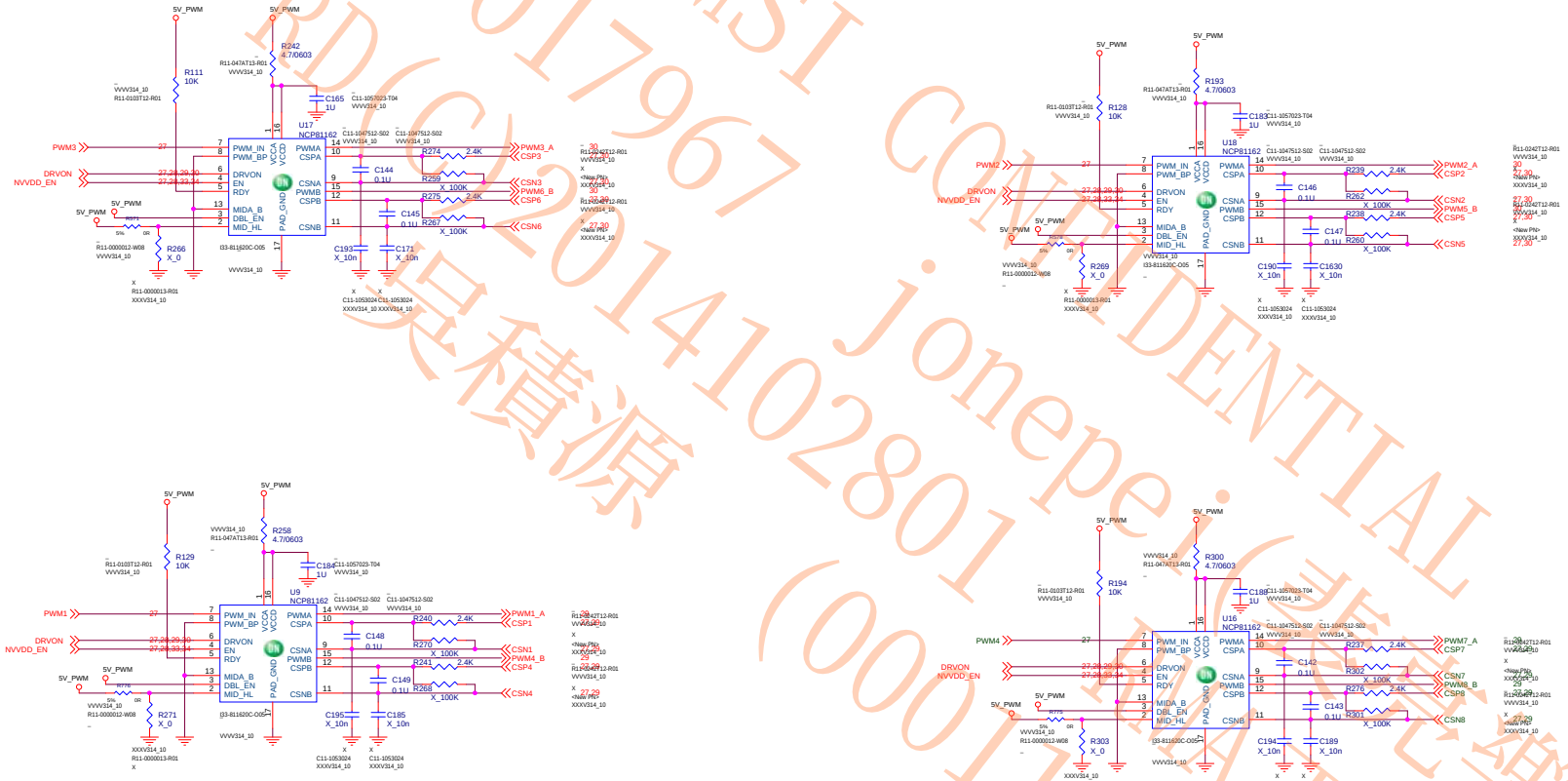

ASSEMBLY	BASE LEVEL GENERIC SCHEMATIC ONLY
PAGE DETAIL	PS: NVVDD Phase 1,2

ALL NVIDIA DESIGN SPECIFICATIONS, REFERENCE SPECIFICATIONS, REFERENCE BOARDS, FILES, DRAWINGS, DIAGNOSTICS, LISTS AND OTHER DOCUMENTS OR INFORMATION (TOGETHER AND SEPARATELY, 'MATERIALS') ARE BEING PROVIDED 'AS IS'. THE MATERIALS MAY CONTAIN KNOWN AND UNKNOWN VIOLATIONS OR DEVIATIONS OF INDUSTRY STANDARDS AND SPECIFICATIONS. NVIDIA MAKES NO WARRANTIES, EXPRESSED, IMPLIED, STATUTORY OR OTHERWISE WITH RESPECT TO THE MATERIALS OR OTHERWISE, AND EXPRESSLY DISCLAIMS ALL IMPLIED WARRANTIES INCLUDING, WITHOUT LIMITATION, THE WARRANTIES OF DESIGN, OF NONINFRINGEMENT, MERCHANTABILITY OR FITNESS FOR A PARTICULAR PURPOSE, OR ARISING FROM A COURSE OF DEALING, TRADE USAGE, TRADE PRACTICE, OR INDUSTRY STANDARDS.

MSI CONFIDENTIAL
000017967
RD(C)20141028011
jonepe.(微笑樂)
吳積源
(000116011)
研發工程師

MICRO-STAR INT'L CO.,LTD

MS-V317

Size	Document Description	Rev
Custom	NVVDD PHASE DOUBLERS	1.0

Date: Wednesday, August 20, 2014 | Sheet 28 of 37

NVIDIA CORPORATION
2701 SAN TOMAS EXPRESSWAY
SANTA CLARA, CA 95050, USA

NV_PN	600-1G401-BASE-QS1		
PCB REV	PG401-A02	PAGE	28 OF 37
BOM REV	A	DATE	04-AUG-2014

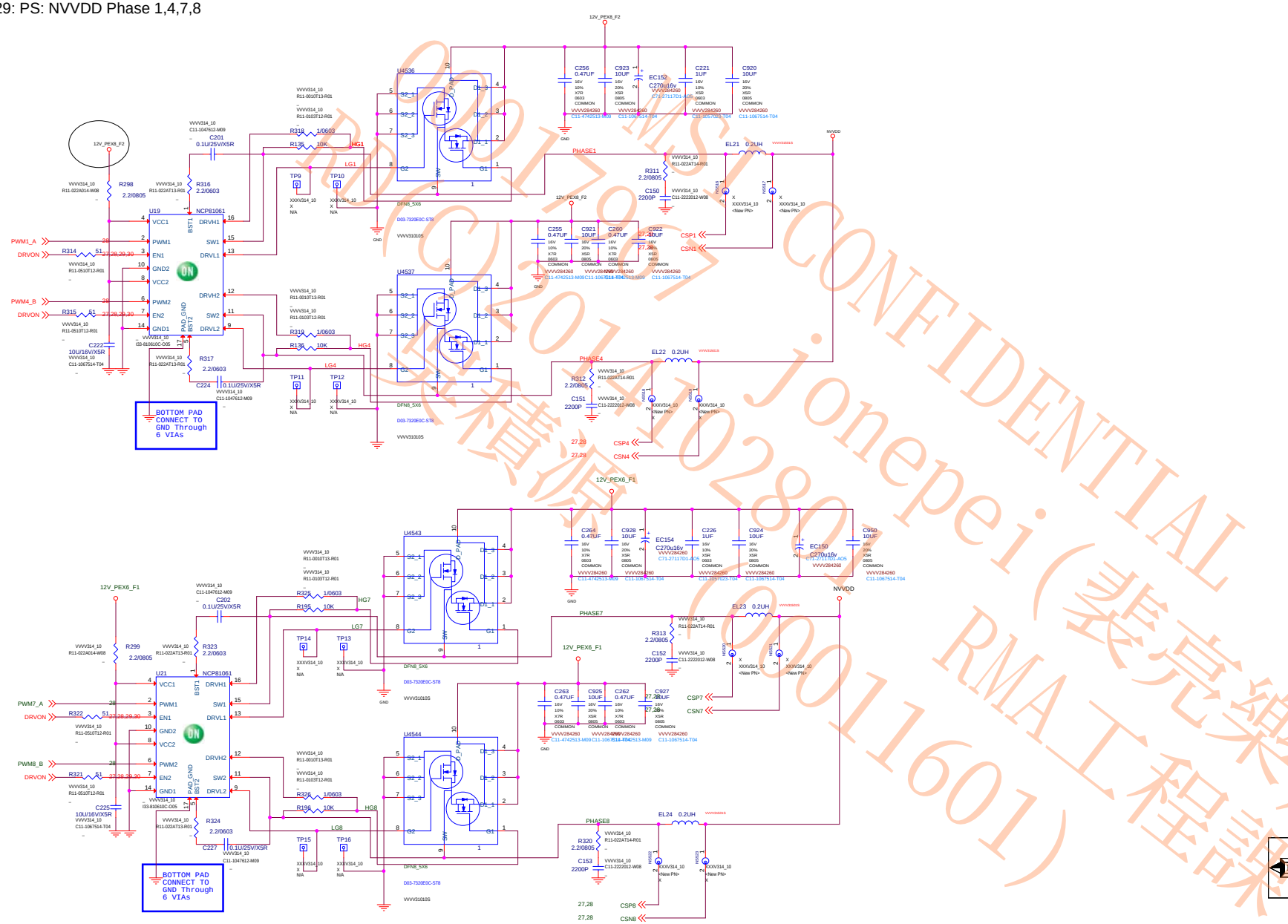

MICRO-STAR INT'L CO.,LTD	
MS-V317	
Size Custom	Document Description: NVVDD Phase 1 & 4/ 7 & 8 — Rev 1.0
Date: Wednesday, August 20, 2014	Sheet 29 of 37

NVIDIA CORPORATION
2701 SAN TOMAS EXPRESSWAY
SANTA CLARA, CA 95050, USA

NV_PN	600-1G401-BASE-QS1		
PCB REV	PG401-A02	PAGE	29 OF 37
BOM REV	A	DATE	04-AUG-2014

ASSEMBLY	BASE LEVEL GENERIC SCHEMATIC ONLY
PAGE DETAIL	PS: NVVDD Phase 3,4

ALL NVIDIA DESIGN SPECIFICATIONS, REFERENCE SPECIFICATIONS, REFERENCE BOARDS, FILES, DRAWINGS, DIAGNOSTICS, LISTS AND OTHER DOCUMENTS OR INFORMATION (TOGETHER AND SEPARATELY, 'MATERIALS') ARE BEING PROVIDED 'AS IS'. THE MATERIALS MAY CONTAIN KNOWN AND UNKNOWN VIOLATIONS OR DEVIATIONS OF INDUSTRY STANDARDS AND SPECIFICATIONS. NVIDIA MAKES NO WARRANTIES, EXPRESSED, IMPLIED, STATUTORY OR OTHERWISE WITH RESPECT TO THE MATERIALS OR OTHERWISE, AND EXPRESSLY DISCLAIMS ALL IMPLIED WARRANTIES INCLUDING, WITHOUT LIMITATION, THE WARRANTIES OF DESIGN, OF NONINFRINGEMENT, MERCHANTABILITY OR FITNESS FOR A PARTICULAR PURPOSE, OR ARISING FROM A COURSE OF DEALING, TRADE USAGE, TRADE PRACTICE, OR INDUSTRY STANDARDS.

MSI CONFIDENTIAL
RDC(C)2014102801 Jonepei(裴亮樂)
(00011601) RMA工程師

Page30: PS: NVVDD Phase 3,6,2,5

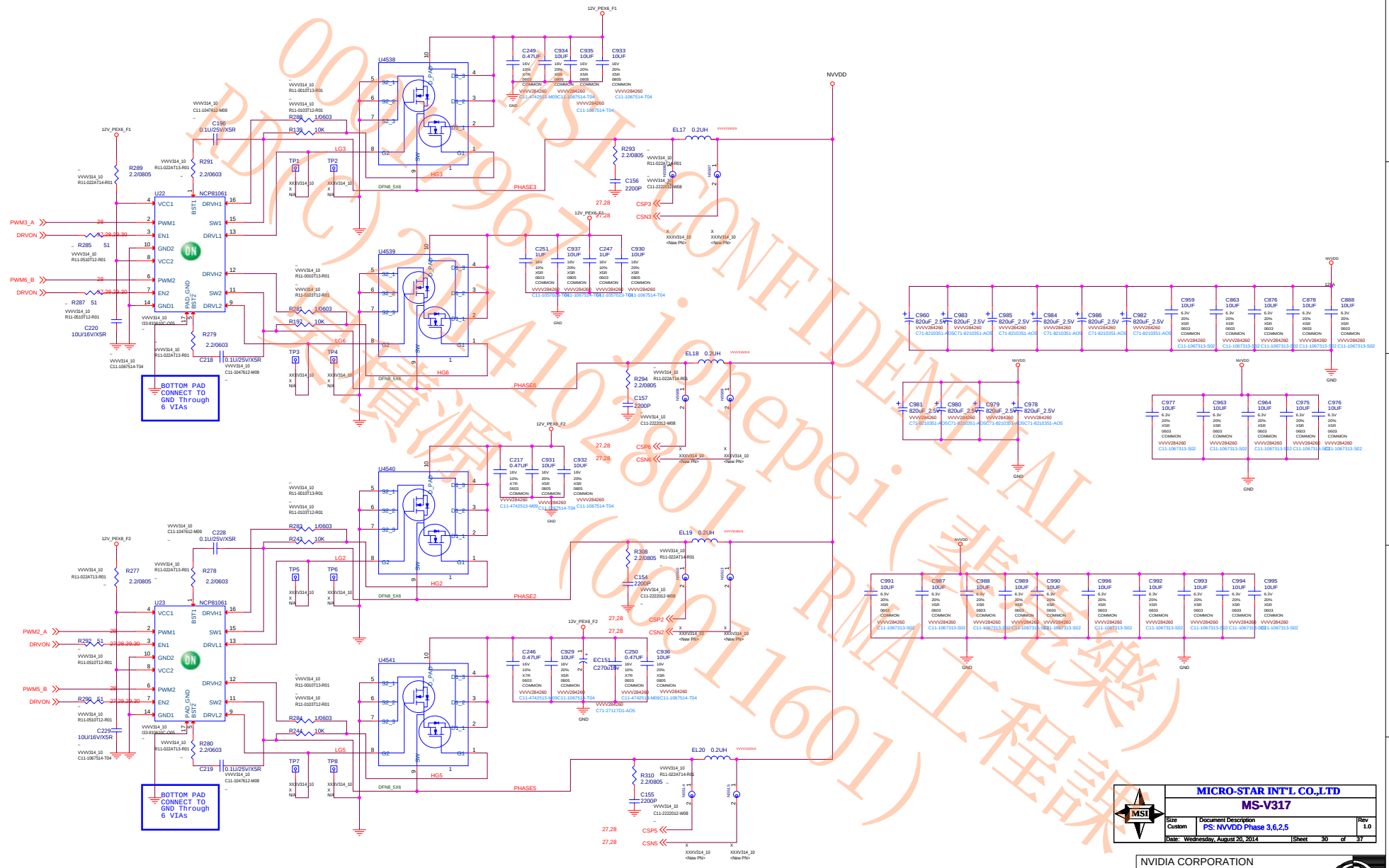

ASSEMBLY	BASE LEVEL GENERIC SCHEMATIC ONLY
PAGE DETAIL	PS: NVVDD Phase 5, 6

ALL NVIDIA DESIGN SPECIFICATIONS, REFERENCE SPECIFICATIONS, REFERENCE BOARDS, FILES, DRAWINGS, DIAGNOSTICS, LISTS AND OTHER DOCUMENTS OR INFORMATION (TOGETHER AND SEPARATELY, 'MATERIALS') ARE BEING PROVIDED 'AS IS'. THE MATERIALS MAY CONTAIN KNOWN AND UNKNOWN VIOLATIONS OR DEVIATIONS OF INDUSTRY STANDARDS AND SPECIFICATIONS. NVIDIA MAKES NO WARRANTIES, EXPRESSED, IMPLIED, STATUTORY OR OTHERWISE WITH RESPECT TO THE MATERIALS OR OTHERWISE, AND EXPRESSLY DISCLAIMS ALL IMPLIED WARRANTIES INCLUDING, WITHOUT LIMITATION, THE WARRANTIES OF DESIGN, OF NONINFRINGEMENT, MERCHANTABILITY OR FITNESS FOR A PARTICULAR PURPOSE, OR ARISING FROM A COURSE OF DEALING, TRADE USAGE, TRADE PRACTICE, OR INDUSTRY STANDARDS.

MICRO-STAR INT'L CO.,LTD

MS-V317

Size	Document Description	Rev
Custom	PS: NVVDD Phase 3,6,2,5	1.0

Date: Wednesday, August 20, 2014 | Sheet 30 of 37

NVIDIA CORPORATION
2701 SAN TOMAS EXPRESSWAY
SANTA CLARA, CA 95050, USA

NV_PN	600-1G401-BASE-QS1		
PCB REV	PG401-A02	PAGE	30 OF 37
BOM REV	A	DATE	04-AUG-2014

MSI CONFIDENTIAL
RMA工程課
(0931601)
jonepei(龍世樂)
(0931601)

Page31: FBVDDQ

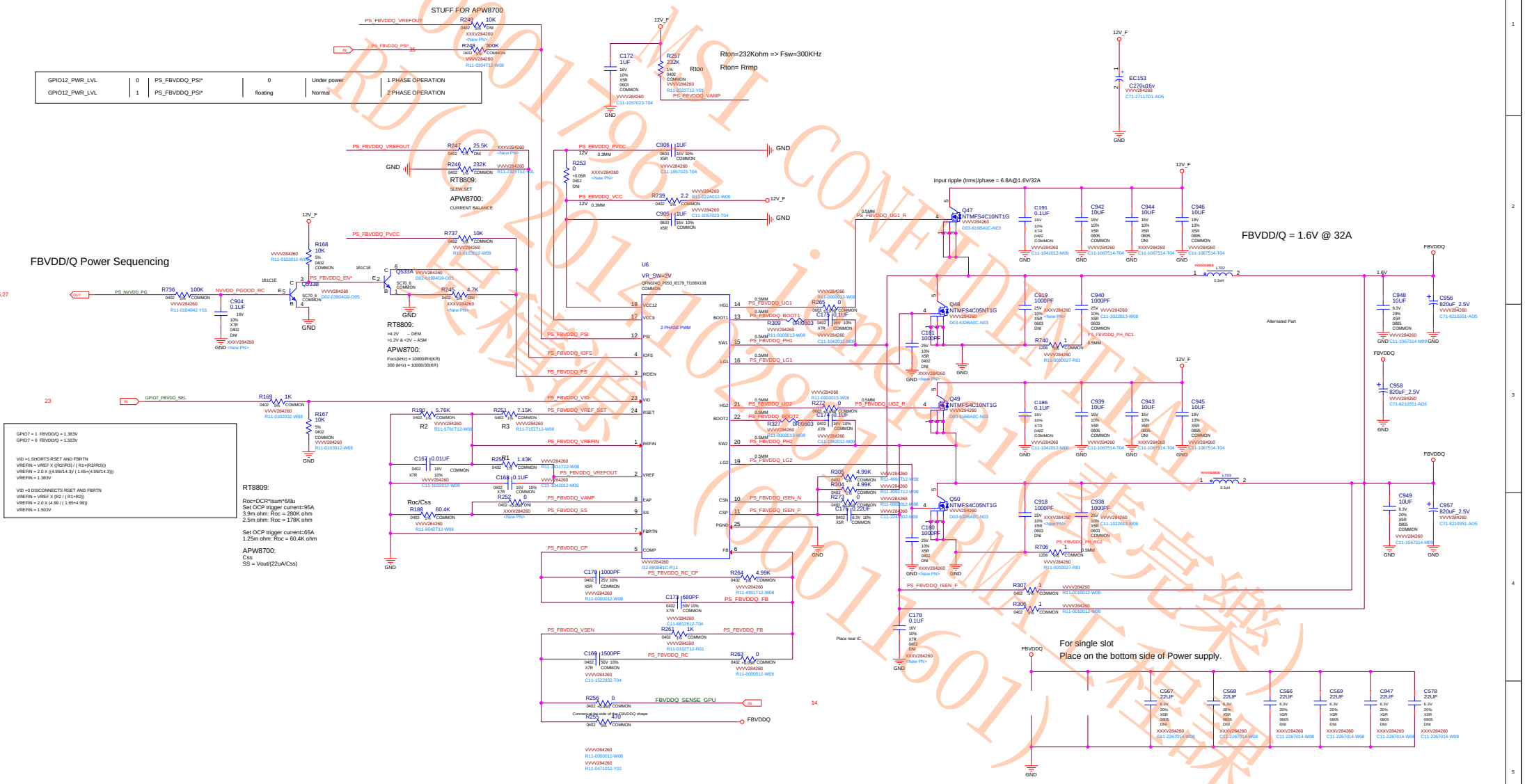

GPIO12_PWR_LVL	0	PS_FBVDDQ_PSI*	0	Under power	1 PHASE OPERATION
GPIO12_PWR_LVL	1	PS_FBVDDQ_PSI*	floating	Normal	2 PHASE OPERATION

ALL NVIDIA DESIGN SPECIFICATIONS, REFERENCE SPECIFICATIONS, REFERENCE BOARDS, FILES, DRAWINGS, DIAGNOSTICS, LISTS AND OTHER DOCUMENTS OR INFORMATION (TOGETHER AND SEPARATELY, 'MATERIALS') ARE BEING PROVIDED 'AS IS'. THE MATERIALS MAY CONTAIN KNOWN AND UNKNOWN VIOLATIONS OR DEVIATIONS OF INDUSTRY STANDARDS AND SPECIFICATIONS. NVIDIA MAKES NO WARRANTIES, EXPRESSED, IMPLIED, STATUTORY OR OTHERWISE WITH RESPECT TO THE MATERIALS OR OTHERWISE, AND EXPRESSLY DISCLAIMS ALL IMPLIED WARRANTIES INCLUDING, WITHOUT LIMITATION, THE WARRANTIES OF DESIGN, OF NONINFRINGEMENT, MERCHANTABILITY OR FITNESS FOR A PARTICULAR PURPOSE, OR ARISING FROM A COURSE OF DEALING, TRADE USAGE, TRADE PRACTICE, OR INDUSTRY STANDARDS.

ASSEMBLY	BASE LEVEL GENERIC SCHEMATIC ONLY
PAGE DETAIL	PS: Dynamic Power Balance Logic

NVIDIA CORPORATION
2701 SAN TOMAS EXPRESSWAY
SANTA CLARA, CA 95050, USA

NV_PN	600-1G401-BASE-QS1		
PCB REV	PG401-A02	PAGE	31 OF 37
BOM REV	A	DATE	04-AUG-2014

Page32: 7511-FAN

Thermal IC : NCT7511Y

Layout notice :
*Add ground shielding for D+ and Dtraces.
*D+/D- route has to be away from the high noise area.
*The recommended traces width and ground shielding spacing are 10mils.

Please refer datasheet
TCRIT_SET Table
If floating,shutdown temp. set to 65℃

Thermal Diode

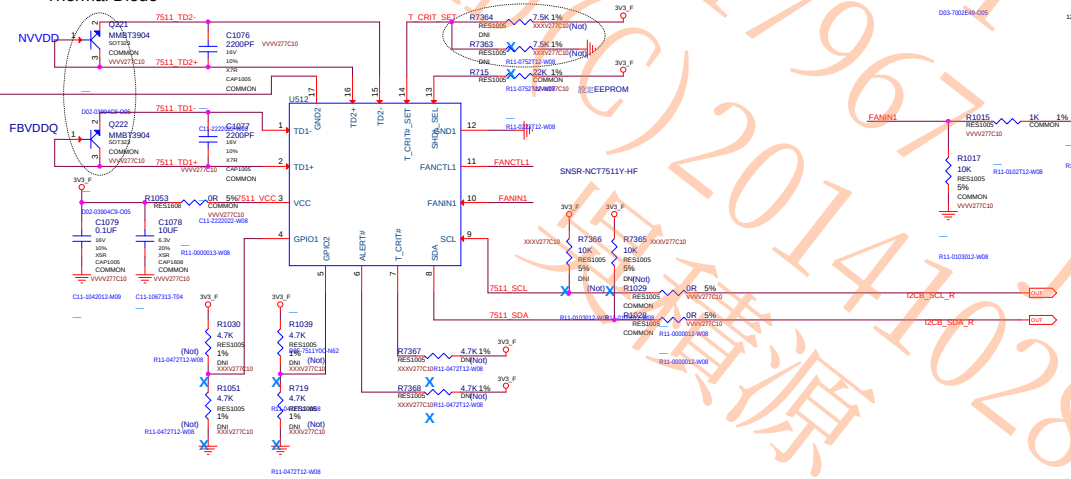

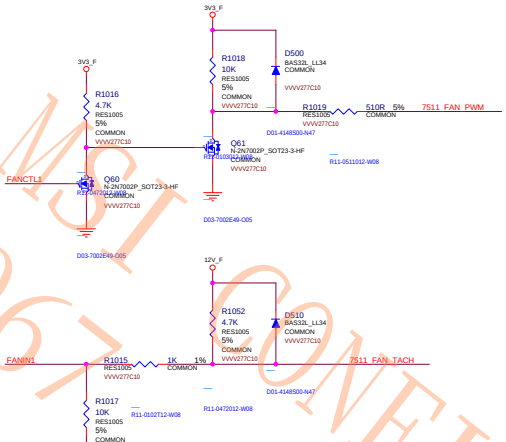

EEPROM

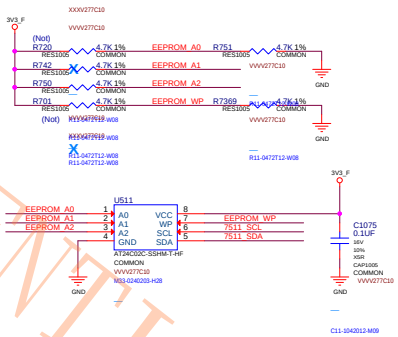

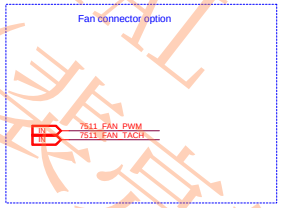

MSI CONFIDENTIAL
RMA工程課
(00011601)

ASSEMBLY	BASE LEVEL GENERIC SCHEMATIC ONLY
PAGE DETAIL	PS: Dynamic Power Balance Phases

ALL NVIDIA DESIGN SPECIFICATIONS, REFERENCE SPECIFICATIONS, REFERENCE BOARDS, FILES, DRAWINGS, DIAGNOSTICS, LISTS AND OTHER DOCUMENTS OR INFORMATION (TOGETHER AND SEPARATELY, 'MATERIALS') ARE BEING PROVIDED 'AS IS'. THE MATERIALS MAY CONTAIN KNOWN AND UNKNOWN VIOLATIONS OR DEVIATIONS OF INDUSTRY STANDARDS AND SPECIFICATIONS. NVIDIA MAKES NO WARRANTIES, EXPRESSED, IMPLIED, STATUTORY OR OTHERWISE WITH RESPECT TO THE MATERIALS OR OTHERWISE, AND EXPRESSLY DISCLAIMS ALL IMPLIED WARRANTIES INCLUDING, WITHOUT LIMITATION, THE WARRANTIES OF DESIGN, OF NONINFRINGEMENT, MERCHANTABILITY OR FITNESS FOR A PARTICULAR PURPOSE, OR ARISING FROM A COURSE OF DEALING, TRADE USAGE, TRADE PRACTICE, OR INDUSTRY STANDARDS.

MICRO-STAR INT'L CO.,LTD

MS-V317

Size	Document Description	Rev
Custom	7511-FAN	1.0

Date: Wednesday, August 20, 2014 | Sheet 32 of 37

NVIDIA CORPORATION
2701 SAN TOMAS EXPRESSWAY
SANTA CLARA, CA 95050, USA

NV_PN	600-1G401-BASE-QS1		
PCB REV	PG401-A02	PAGE	32 OF 37
BOM REV	A	DATE	04-AUG-2014

Page33: PS: Inputs, Filtering, and Monitoring

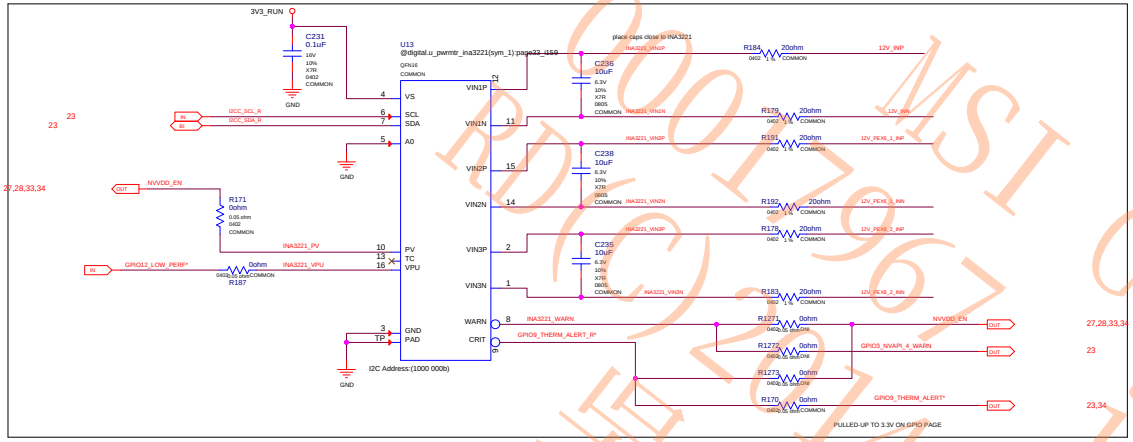

PEX 3V3 INPUT - 10W

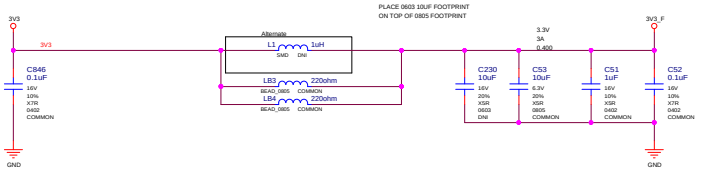

PEX_12V INPUT - 66W

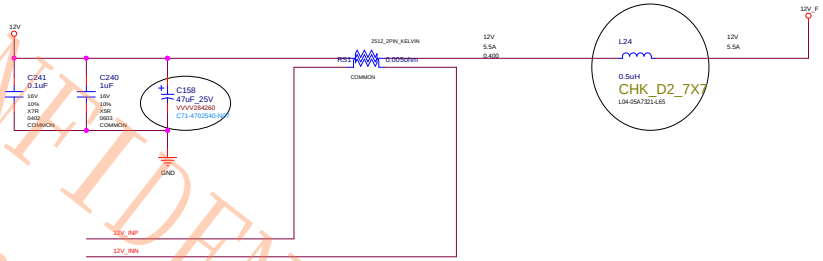

PEX6 INPUT 1 - 2x3 PCIE CON 75W

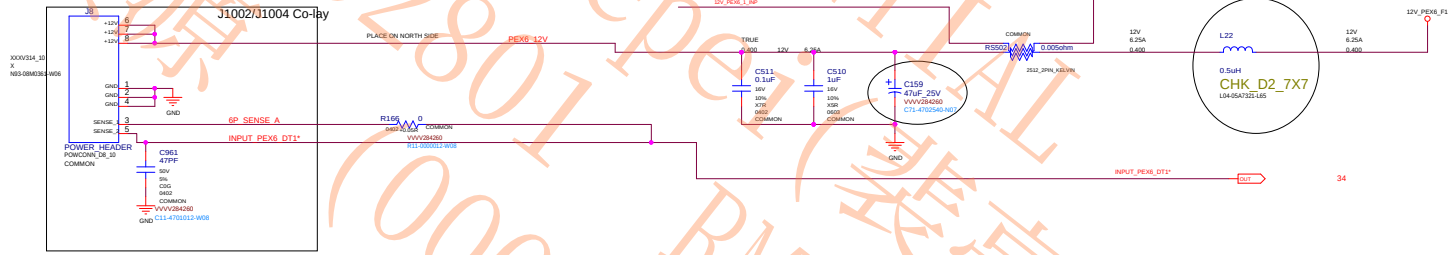

PEX8 INPUT 2 - 2x4 PCIE CON 150W

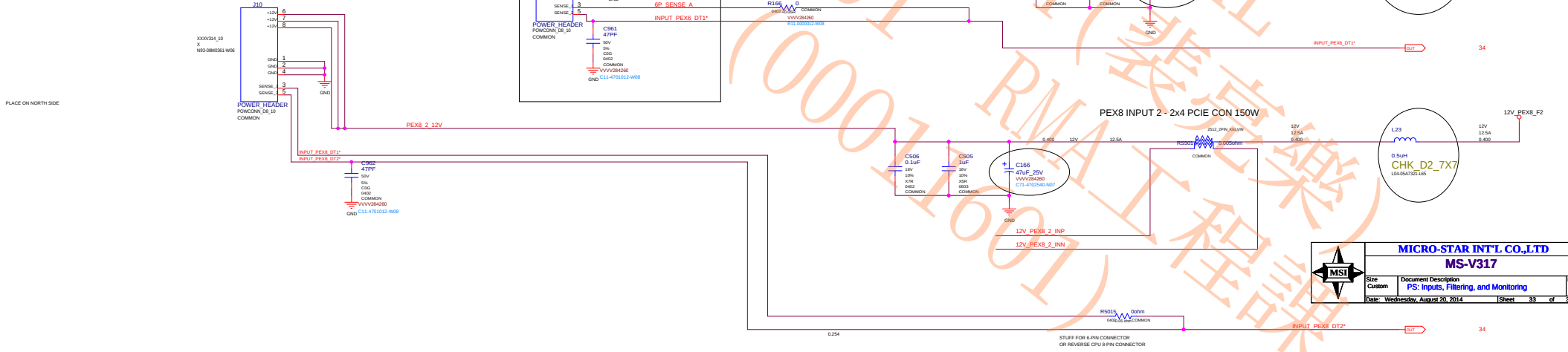

ASSEMBLY	BASE LEVEL GENERIC SCHEMATIC ONLY
PAGE DETAIL	PS: Inputs, Filtering, and Monitoring

MICRO-STAR INT'L CO.,LTD

MS-V317

Size	Document Description	Rev
Custom	PS: Inputs, Filtering, and Monitoring	1.0

Date: Wednesday, August 20, 2014 | Sheet 33 of 37

ALL NVIDIA DESIGN SPECIFICATIONS, REFERENCE SPECIFICATIONS, REFERENCE BOARDS, FILES, DRAWINGS, DIAGNOSTICS, LISTS AND OTHER DOCUMENTS OR INFORMATION (TOGETHER AND SEPARATELY, 'MATERIALS') ARE BEING PROVIDED 'AS IS'. THE MATERIALS MAY CONTAIN KNOWN AND UNKNOWN VIOLATIONS OR DEVIATIONS OF INDUSTRY STANDARDS AND SPECIFICATIONS. NVIDIA MAKES NO WARRANTIES, EXPRESSED, IMPLIED, STATUTORY OR OTHERWISE WITH RESPECT TO THE MATERIALS OR OTHERWISE, AND EXPRESSLY DISCLAIMS ALL IMPLIED WARRANTIES INCLUDING, WITHOUT LIMITATION, THE WARRANTIES OF DESIGN, OF NONINFRINGEMENT, MERCHANTABILITY OR FITNESS FOR A PARTICULAR PURPOSE, OR ARISING FROM A COURSE OF DEALING, TRADE USAGE, TRADE PRACTICE, OR INDUSTRY STANDARDS.

NVIDIA CORPORATION
2701 SAN TOMAS EXPRESSWAY
SANTA CLARA, CA 95050, USA

NV_PN	600-1G401-BASE-QS1		
PCB REV	PG401-A02	PAGE	33 OF 37
BOM REV	A	DATE	04-AUG-2014

MSI CONFIDENTIAL
RD(0017967) Jonepen(英積源)
2014102801 RMA工程課
(0000160)

Page34: PS: Shutdown

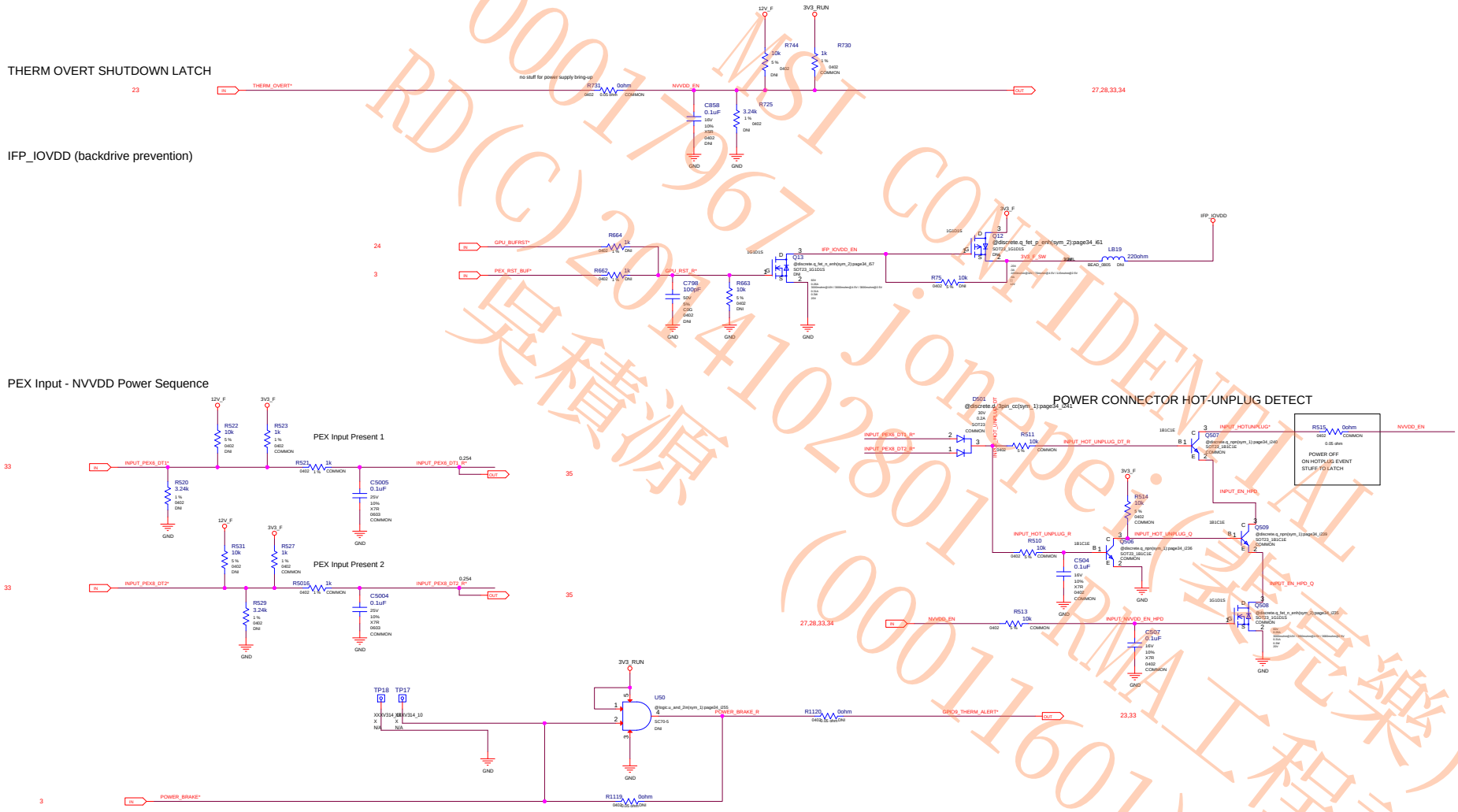

MSI CONFIDENTIAL
0001767
RD(C)2014102801 Jonpe
(00011601)
吳積源 (樂完樂)
RMA工程部

MICRO-STAR INT'L CO.,LTD	
MS-V317	
Size: Custom	Document Description: PS: Shutdown
Rev: 1.0	
Date: Wednesday, August 20, 2014	Sheet 34 of 37

NVIDIA CORPORATION
2701 SAN TOMAS EXPRESSWAY
SANTA CLARA, CA 95050, USA

NV_PN	600-1G401-BASE-QS1		
PCB REV	PG401-A02	PAGE	34 OF 37
BOM REV	A	DATE	04-AUG-2014

ASSEMBLY	BASE LEVEL GENERIC SCHEMATIC ONLY
PAGE DETAIL	PS: Shutdown

ALL NVIDIA DESIGN SPECIFICATIONS, REFERENCE SPECIFICATIONS, REFERENCE BOARDS, FILES, DRAWINGS, DIAGNOSTICS, LISTS AND OTHER DOCUMENTS OR INFORMATION (TOGETHER AND SEPARATELY, 'MATERIALS') ARE BEING PROVIDED 'AS IS'. THE MATERIALS MAY CONTAIN KNOWN AND UNKNOWN VIOLATIONS OR DEVIATIONS OF INDUSTRY STANDARDS AND SPECIFICATIONS. NVIDIA MAKES NO WARRANTIES, EXPRESSED, IMPLIED, STATUTORY OR OTHERWISE WITH RESPECT TO THE MATERIALS OR OTHERWISE, AND EXPRESSLY DISCLAIMS ALL IMPLIED WARRANTIES INCLUDING, WITHOUT LIMITATION, THE WARRANTIES OF DESIGN, OF NONINFRINGEMENT, MERCHANTABILITY OR FITNESS FOR A PARTICULAR PURPOSE, OR ARISING FROM A COURSE OF DEALING, TRADE USAGE, TRADE PRACTICE, OR INDUSTRY STANDARDS.

Page35: PS: 12V Current Steering, PSI Control, and LED

MICRO-STAR INT'L CO.,LTD		
MS-V317		
Size: Custom	Document Description: 12V Current Steering, PSI Control, and LED	Rev: 1.0
Date: Wednesday, August 20, 2014	Sheet 35 of 37	

PEX Input - 12V Current Steering FETs

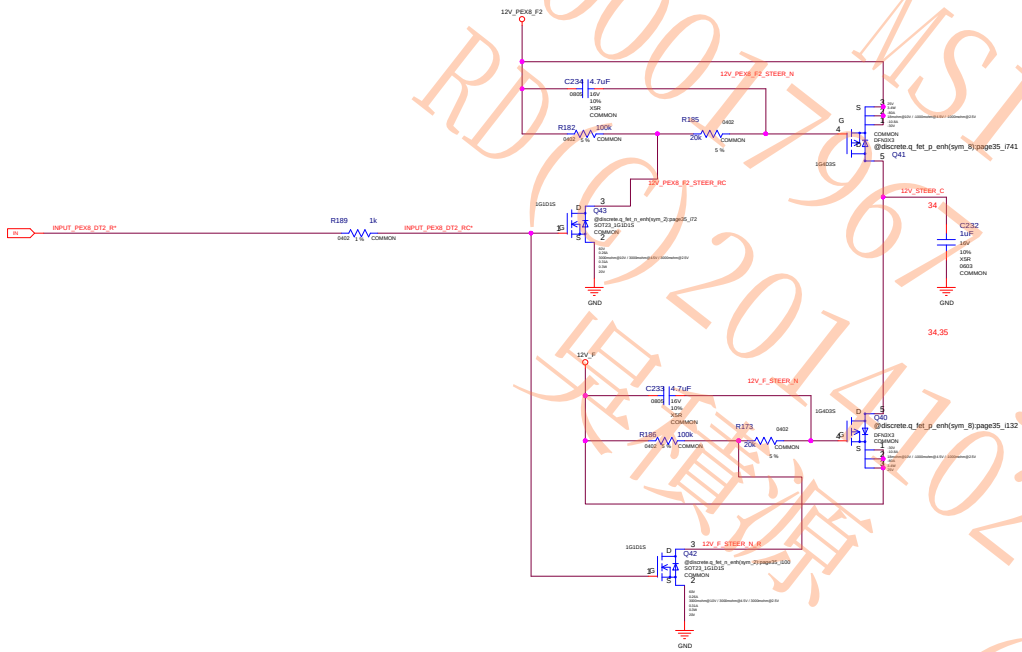

PEX Input - Power Level/PSI* Control

GPIO12_LOW_PERF*	GPU SPEED
0	Slow
1	Normal

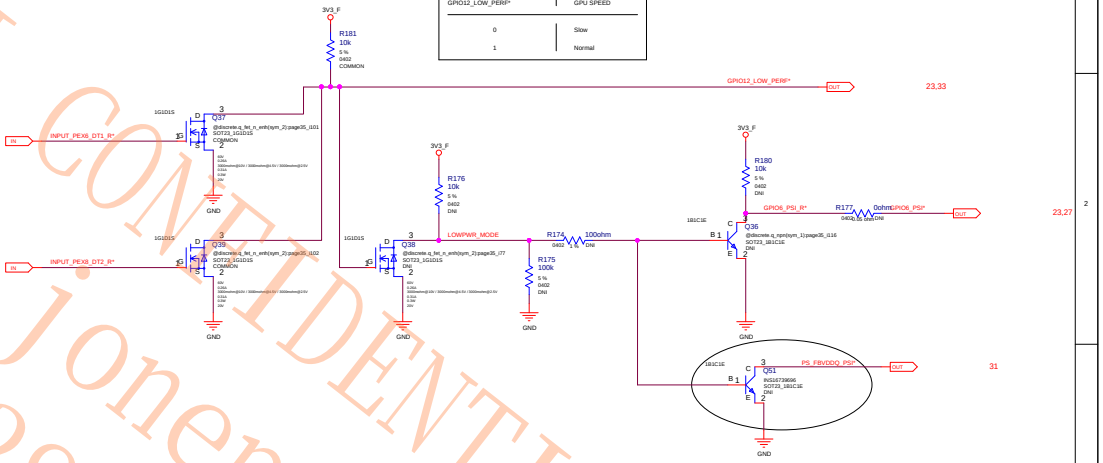

GeForce Logo LED

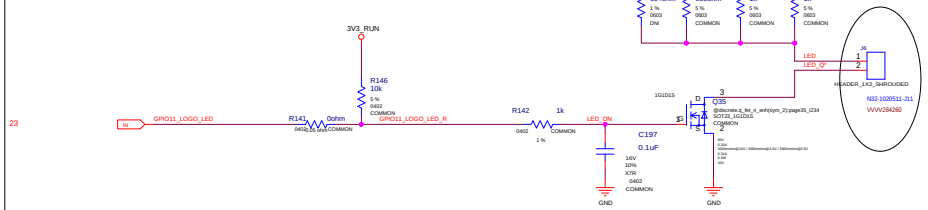

SLI LED (GEFORCE ONLY)

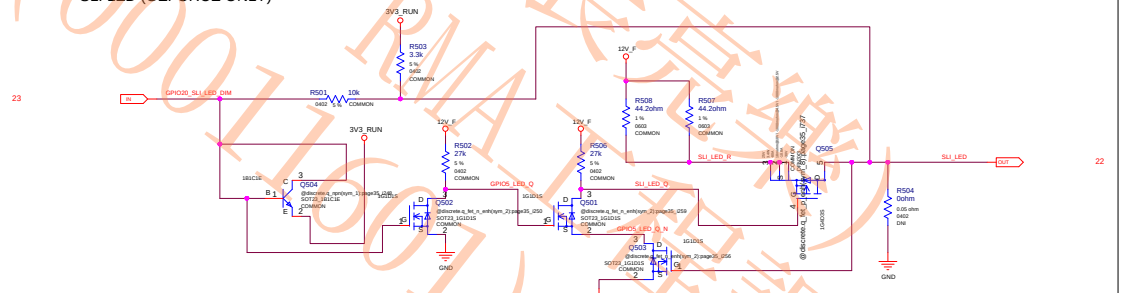

MSI CONFIDENTIAL
RD(C)2014 Jonepei(裴宗鋒)
0001796 (0001602)
RMA(裴宗鋒)

ASSEMBLY	BASE LEVEL GENERIC SCHEMATIC ONLY
PAGE DETAIL	PS: 12V Current Steering PSI Control and LED

ALL NVIDIA DESIGN SPECIFICATIONS, REFERENCE SPECIFICATIONS, REFERENCE BOARDS, FILES, DRAWINGS, DIAGNOSTICS, LISTS AND OTHER DOCUMENTS OR INFORMATION (TOGETHER AND SEPARATELY, 'MATERIALS') ARE BEING PROVIDED 'AS IS'. THE MATERIALS MAY CONTAIN KNOWN AND UNKNOWN VIOLATIONS OR DEVIATIONS OF INDUSTRY STANDARDS AND SPECIFICATIONS. NVIDIA MAKES NO WARRANTIES, EXPRESSED, IMPLIED, STATUTORY OR OTHERWISE WITH RESPECT TO THE MATERIALS OR OTHERWISE, AND EXPRESSLY DISCLAIMS ALL IMPLIED WARRANTIES INCLUDING, WITHOUT LIMITATION, THE WARRANTIES OF DESIGN, OF NONINFRINGEMENT, MERCHANTABILITY OR FITNESS FOR A PARTICULAR PURPOSE, OR ARISING FROM A COURSE OF DEALING, TRADE USAGE, TRADE PRACTICE, OR INDUSTRY STANDARDS.

NVIDIA CORPORATION
2701 SAN TOMAS EXPRESSWAY
SANTA CLARA, CA 95050, USA

NV_PN	600-1G401-BASE-QS1		
PCB REV	PG401-A02	PAGE	35 OF 37
BOM REV	A	DATE	04-AUG-2014

Page36: Mechanical: Bracket/Thermal Solution

MSI CONFIDENTIAL
00017967 jonepei(裴亮樂)
RD(C)20141028 01 PMA工程課
提積源 (00011601)

Brackets:

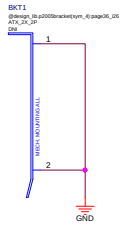

Bracket Screw

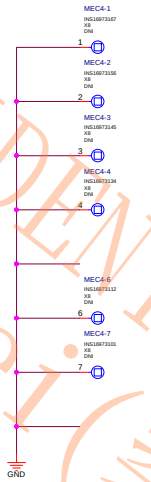

Mechanical Holes Symbol

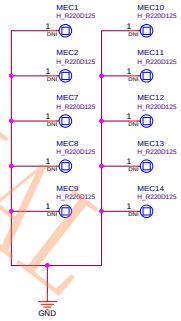

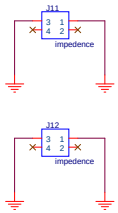

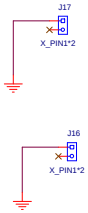

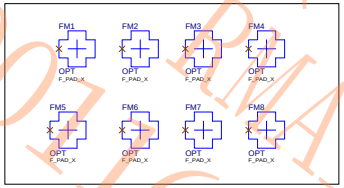

ASSEMBLY	BASE LEVEL GENERIC SCHEMATIC ONLY
PAGE DETAIL	MECH: Bracket/Thermal

ALL NVIDIA DESIGN SPECIFICATIONS, REFERENCE SPECIFICATIONS, REFERENCE BOARDS, FILES, DRAWINGS, DIAGNOSTICS, LISTS AND OTHER DOCUMENTS OR INFORMATION (TOGETHER AND SEPARATELY, 'MATERIALS') ARE BEING PROVIDED 'AS IS'. THE MATERIALS MAY CONTAIN KNOWN AND UNKNOWN VIOLATIONS OR DEVIATIONS OF INDUSTRY STANDARDS AND SPECIFICATIONS. NVIDIA MAKES NO WARRANTIES, EXPRESSED, IMPLIED, STATUTORY OR OTHERWISE WITH RESPECT TO THE MATERIALS OR OTHERWISE, AND EXPRESSLY DISCLAIMS ALL IMPLIED WARRANTIES INCLUDING, WITHOUT LIMITATION, THE WARRANTIES OF DESIGN, OF NONINFRINGEMENT, MERCHANTABILITY OR FITNESS FOR A PARTICULAR PURPOSE, OR ARISING FROM A COURSE OF DEALING, TRADE USAGE, TRADE PRACTICE, OR INDUSTRY STANDARDS.

MICRO-STAR INT'L CO.,LTD

MS-V317

Size	Document Description	Rev
Custom	Mechanical: Bracket/Thermal Solution	1.0

Date: Wednesday, August 20, 2014 Sheet 36 of 37

NVIDIA CORPORATION
2701 SAN TOMAS EXPRESSWAY
SANTA CLARA, CA 95050, USA

NV_PN	600-1G401-BASE-QS1		
PCB REV	PG401-A02	PAGE	36 OF 37
BOM REV	A	DATE	04-AUG-2014

Page37:
1.P17 增加DVI ESD
2.P18~P21 修改HDMI,DP footprint,　增加HDMI ESD
3.簡化ＳＬＩ線路
4.移除原本FBVDDQ線路
5.P27~P30 更換NVVD 線路
6.P31~32 移除dynamic power circuit/增加風扇7511線路
7.P33 更換反插8PIN,Input choke
8.P35 增加MEM PSI 晶體
9.Remove MICROCONTROLLER

MSI CONFIDENTIAL
00017967 jonepei(裴亮樂)
RD(C)20141028 01 RMA工程師
吳積源 (00011601)

MICRO-STAR INT'L CO.,LTD
MS-V317

Size	Document Description	Rev
Custom	NA	1.0

Date: Wednesday, August 20, 2014 Sheet 37 of 37

NVIDIA CORPORATION
2701 SAN TOMAS EXPRESSWAY
SANTA CLARA, CA 95050, USA

ASSEMBLY	BASE LEVEL GENERIC SCHEMATIC ONLY
PAGE DETAIL	MICROCONTROLLER

NV_PN	600-1G401-BASE-QS1		
PCB REV	PG401-A02	PAGE	37 OF 37
BOM REV	A	DATE	04-AUG-2014

ALL NVIDIA DESIGN SPECIFICATIONS, REFERENCE SPECIFICATIONS, REFERENCE BOARDS, FILES, DRAWINGS, DIAGNOSTICS, LISTS AND OTHER DOCUMENTS OR INFORMATION (TOGETHER AND SEPARATELY, 'MATERIALS') ARE BEING PROVIDED 'AS IS'. THE MATERIALS MAY CONTAIN KNOWN AND UNKNOWN VIOLATIONS OR DEVIATIONS OF INDUSTRY STANDARDS AND SPECIFICATIONS. NVIDIA MAKES NO WARRANTIES, EXPRESSED, IMPLIED, STATUTORY OR OTHERWISE WITH RESPECT TO THE MATERIALS OR OTHERWISE, AND EXPRESSLY DISCLAIMS ALL IMPLIED WARRANTIES INCLUDING, WITHOUT LIMITATION, THE WARRANTIES OF DESIGN, OF NONINFRINGEMENT, MERCHANTABILITY OR FITNESS FOR A PARTICULAR PURPOSE, OR ARISING FROM A COURSE OF DEALING, TRADE USAGE, TRADE PRACTICE, OR INDUSTRY STANDARDS.